TEKTRONIX®

4051

GRAPHIC SYSTEM

SERVICE MANUAL

VOLUME 2

Tektronix, inc.
P.O. Box 500
Beaverton, Oregon 97077

070-2286-00

First Printing MAY 1977

WARNING

THE FOLLOWING SERVICING INSTRUCTIONS ARE FOR USE BY QUALIFIED PERSONNEL ONLY. TO AVOID PERSONAL INJURY, DO NOT PERFORM ANY SERVICING OTHER THAN THAT CONTAINED IN OPERATING INSTRUCTIONS UNLESS YOU ARE QUALIFIED TO DO SO.

Copyright © 1977 by Tektronix, Inc. Beaverton, Oregon. Printed in the United States of America. All rights reserved. Contents of this publication may not be reproduced in any form without permission of Tektronix, Inc.

This instrument, in whole or in part, may be protected by one or more U.S. or foreign patents or patent applications. Information provided on request by Tektronix, Inc., P.O. Box 500, Beaverton, Oregon 97077.

TEKTRONIX is a registered trademark of Tektronix, Inc.

PRODUCT 4051 GRAPHIC SYSTEM

This manual supports the following versions of this product: B010100 and up.

MANUAL REVISION STATUS

REV.	DATE	DESCRIPTION
@	5 '77	Original Issue

CONTENTS

Section 1	INTRODUCTION
Section 2	CROSS-REFERENCE DATA
Section 3	WIRE HARNESS
Section 4	4051 SCHEMATICS
Section 5	4051 REPLACEABLE ELECTRICAL PARTS
Section 6	4051 REPLACEABLE MECHANICAL PARTS
Section 7	FIRMWARE BACKPACK SCHEMATICS
Section 8	FIRMWARE BACKPACK REPLACEABLE PARTS
Section 9	COMMUNICATION BACKPACK SCHEMATICS
Section 10	COMMUNICATION BACKPACK REPLACEABLE PARTS
Section 11	ROM PACK DATA SHEETS
Appendix A	INDEX OF SIGNAL NAMES
Change Information	

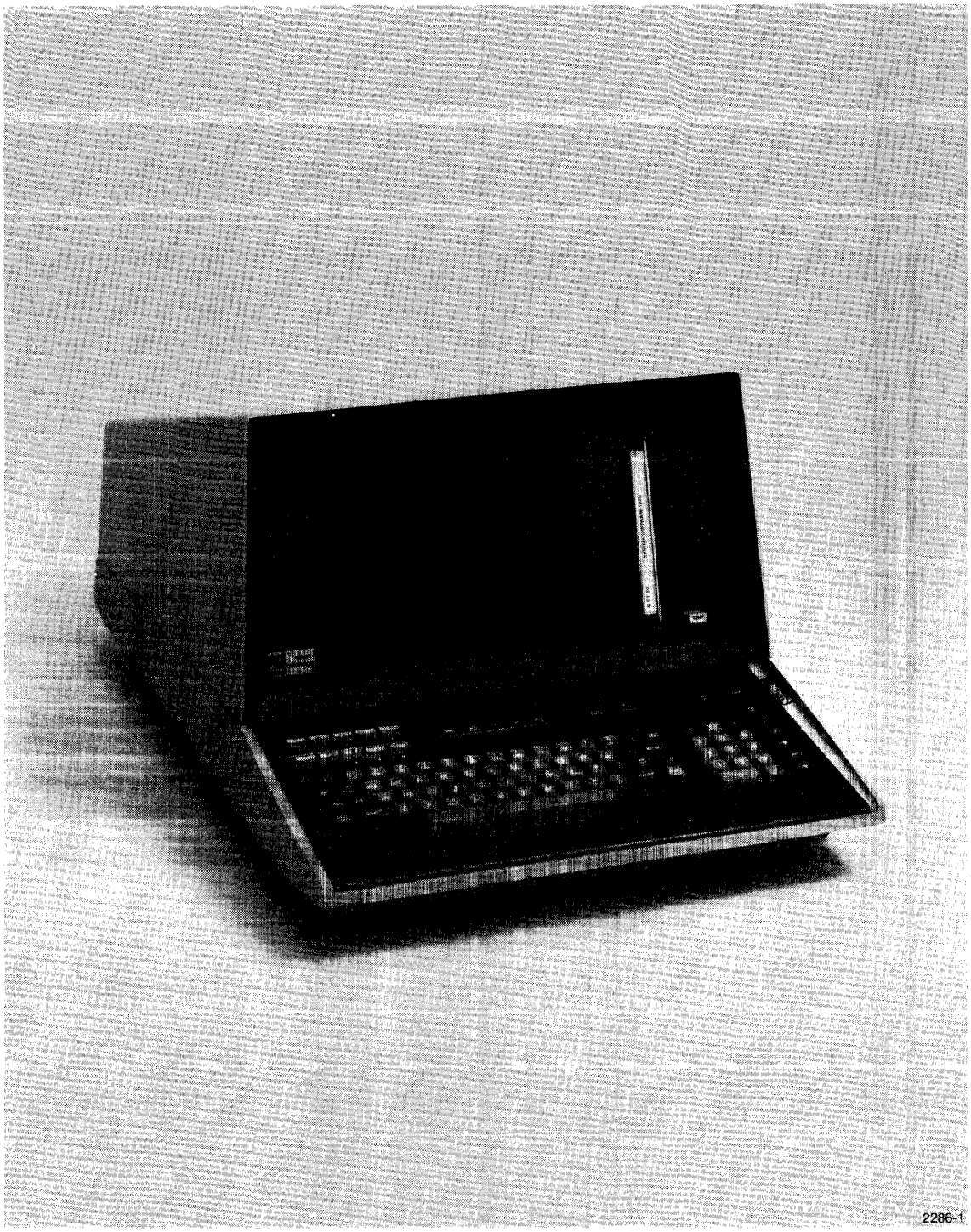

Fig. 1-1. Tektronix 4051 Graphic System.

Section 1

INTRODUCTION

ABOUT THE MANUAL

Service documentation for the 4051 Graphic System is a two-part package of which this manual is the second part.

4051 Service Manual, Volume 1 (070-2065-00)
4051 Service Manual, Volume 2 (070-2286-00)

The first volume contains the text of the maintenance and service information, including assembly/disassembly procedures, circuit descriptions and troubleshooting guidelines. Volume 2 contains schematics, replaceable parts information, cables and wiring, and signal cross reference information.

SYSTEM CONCEPTS

The 4051 Graphic System is illustrated in Fig. 1-1. It executes statements typed on the keyboard using the syntax of the BASIC interpretive computer language. Graphic and alphanumeric information can be stored on the crt display. An optional Communication Backpack can be installed to make the 4051 behave as an intelligent graphic terminal or to emulate one of the Tektronix Computer Display Terminals. A General Purpose Interface Bus (GPIB) is available and conforms to the IEEE Standard 488-1975 defining a standard interface for programmable instruments. An optional joystick can be connected to provide convenient graphic input capability. A Hard Copy Unit can also be connected to the system to directly transfer display information from the crt to photosensitive paper.

The 4051 Graphic System is built around a Motorola 6800 microcomputer system as illustrated by Fig. 1-2. The 6800 microprocessor unit (MPU) is the system controller, scheduler and primary logic device. Other system components include random access memory (RAM) to store BASIC programs and data in machine executable form. Read only memory (ROM) contains the BASIC interpreter and device communication codes. Peripheral interface adapters (PIAs) provide a processor interface to most of the devices comprising a 4051 Graphic System. The primary data linkages between components are shown as are the appropriate 4051 schematics (and backpack schematics) that provide the circuit details.

Detailed circuit descriptions can be found in the *4051 Service Manual, Volume 1.* Supplementary block diagrams are shown in the following figures to help you locate the desired or needed schematics.

Figure 1-3 shows the magnetic tape interface between the system PIAs and the tape drive board. The tape drive board and tape status hardware are illustrated in Fig. 1-4.

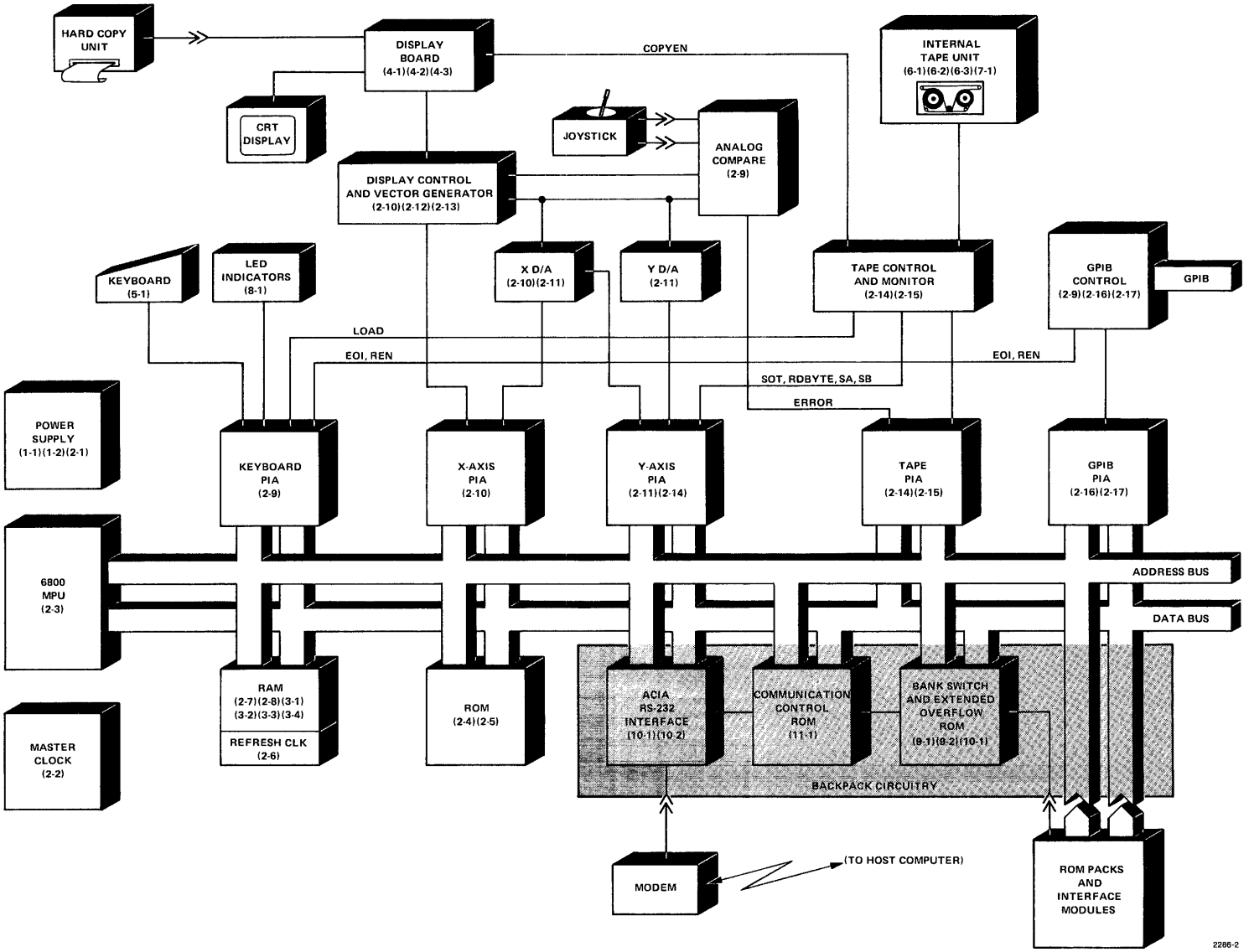

Fig. 1-2. 4051 Graphic System block diagram showing schematic sheet numbers in parenthesis.

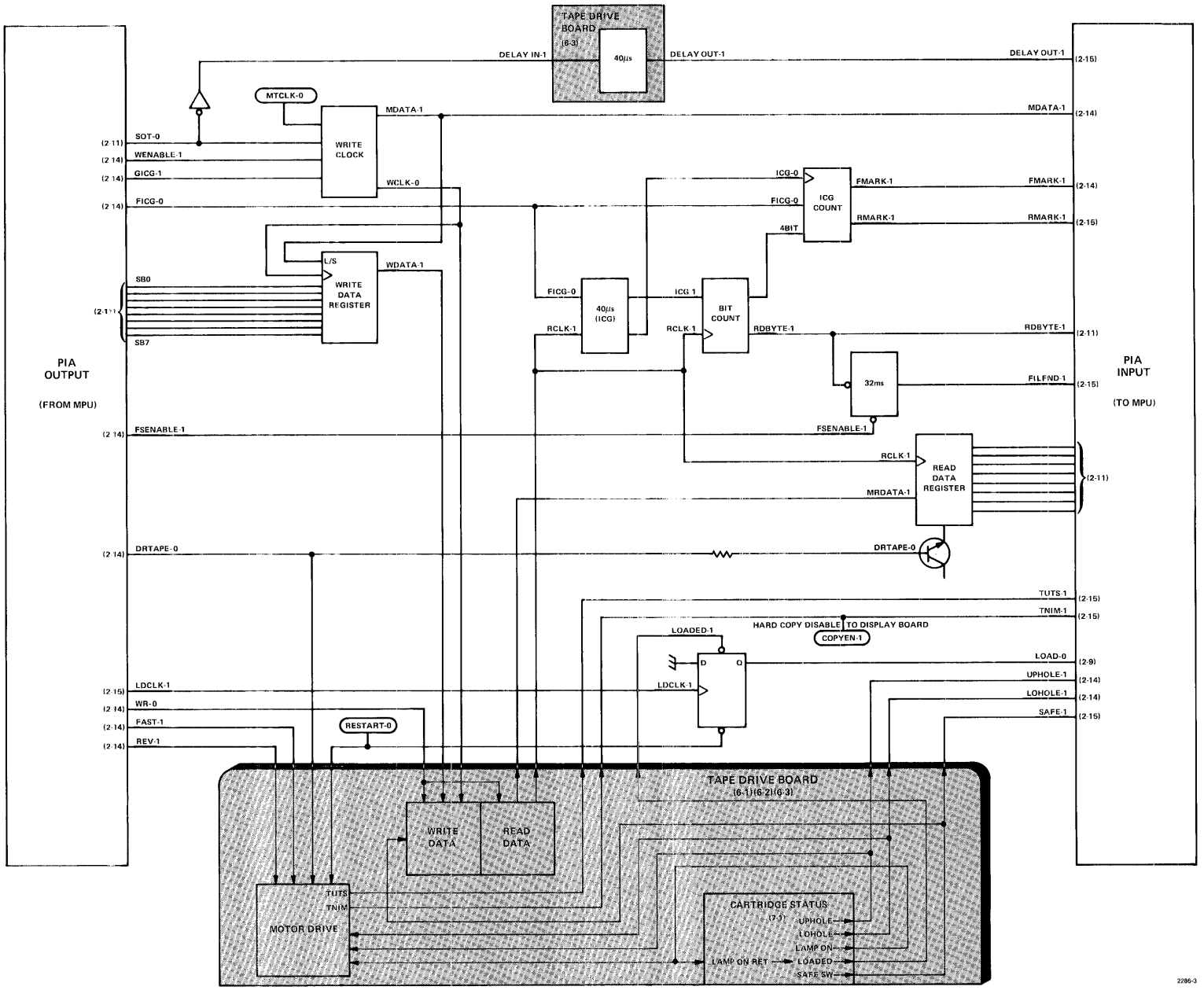

Fig. 1-3. Magnetic tape interface circuitry.

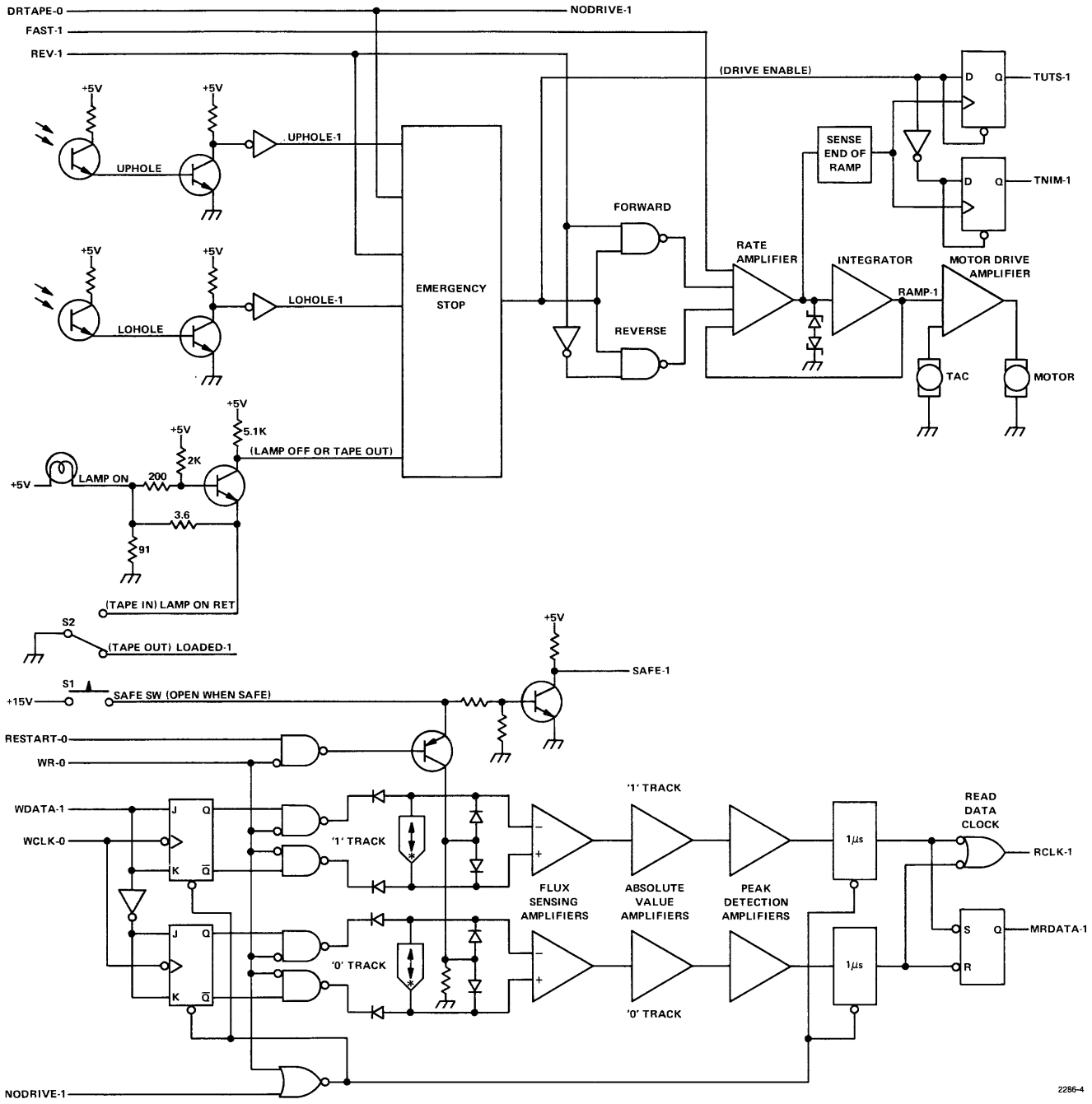

Fig. 1-4. Tape drive circuity illustrating the tape status, tape drive and read/write circuits in detailed block diagram form.

Figure 1-5 shows a detailed block diagram of display control circuits that use signals from PIAs to generate the analog signals required by the display board circuitry. The display board circuits are outlined in Fig. 1-6.

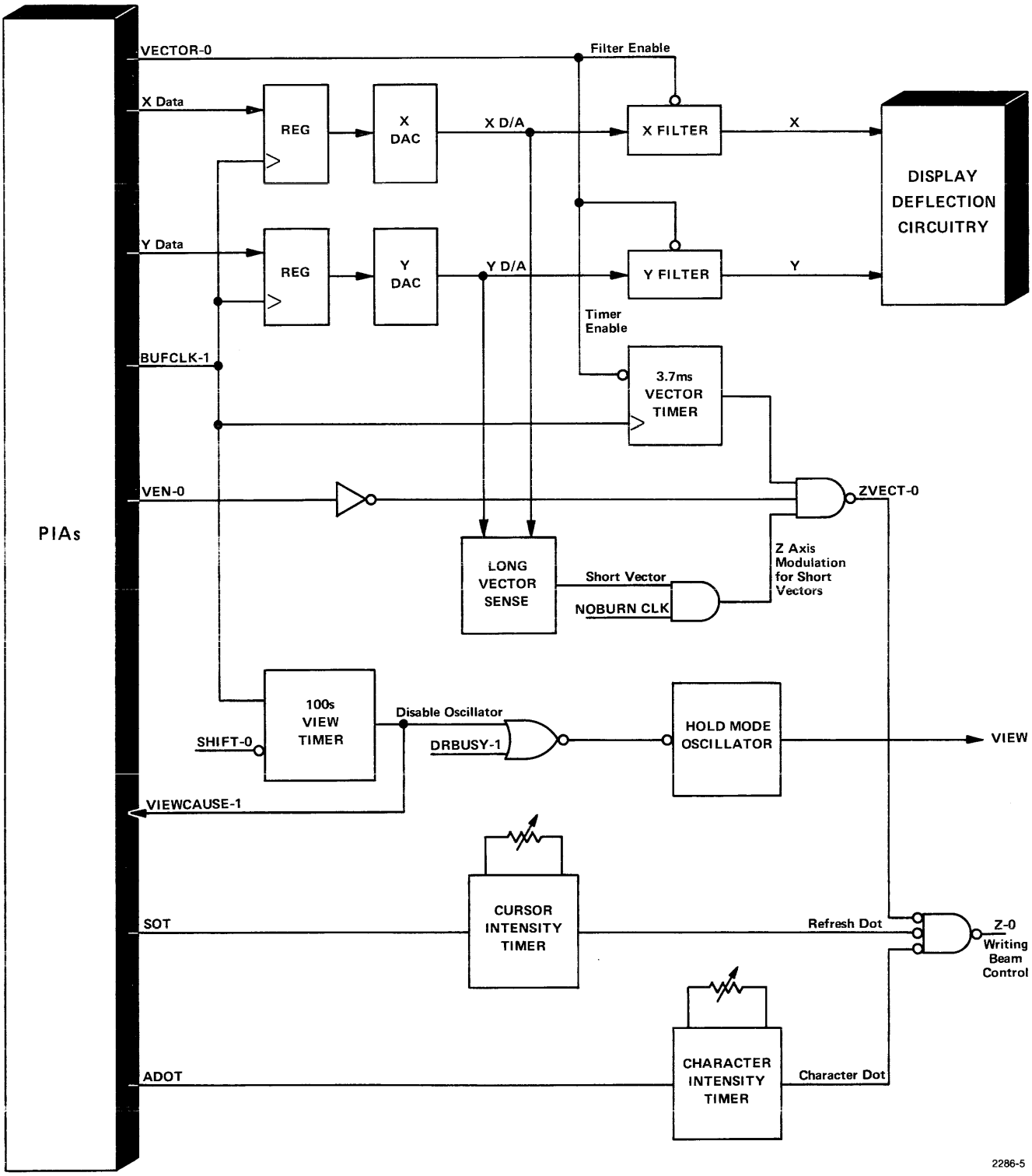

Fig. 1-5. Display control block diagram.

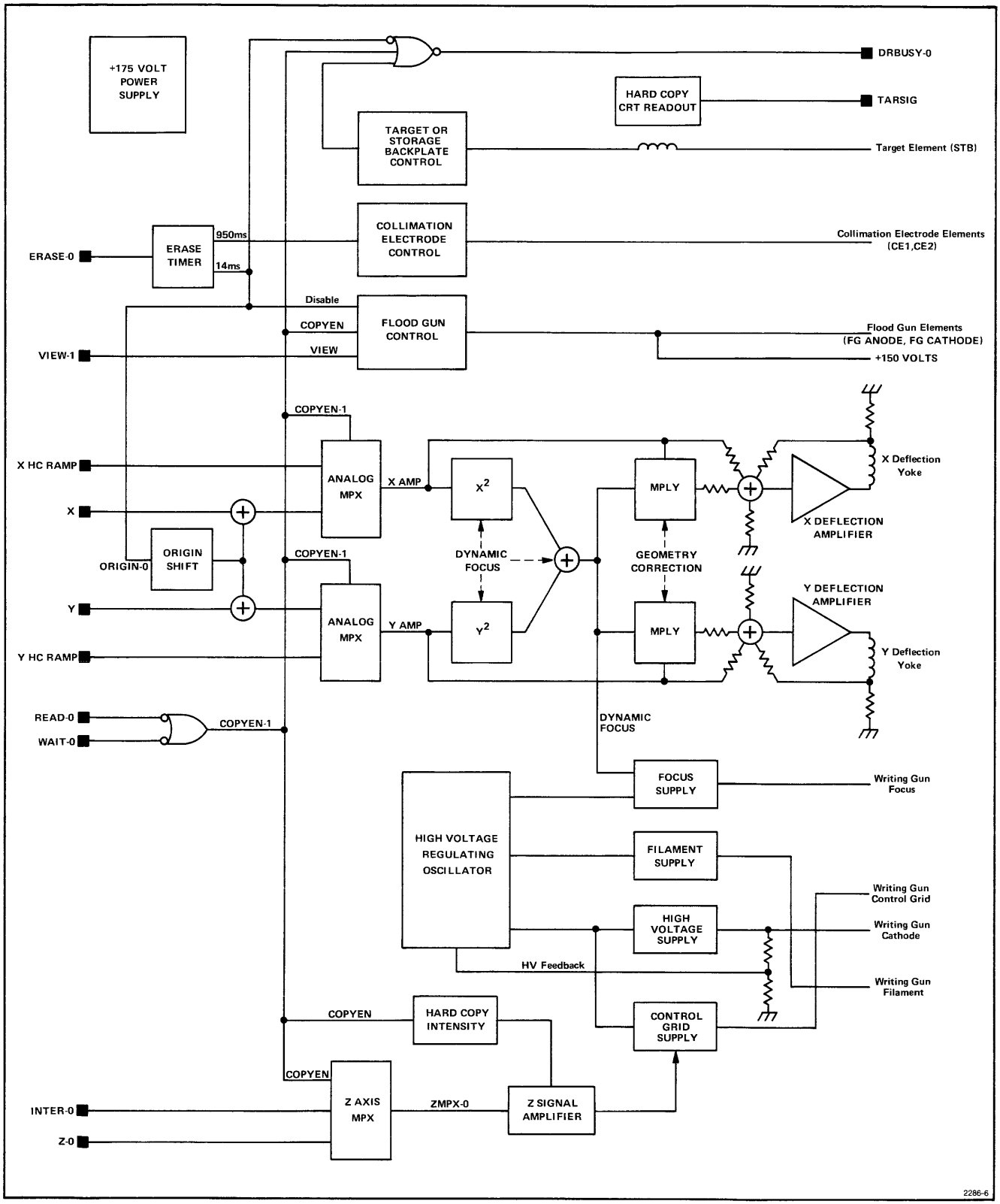

Fig. 1-6. Display unit block diagram.

The General Purpose Interface Bus (GPIB) circuitry is shown in Fig. 1-7. All signal lines are controlled by system firmware and the 6800 microprocessor. The block diagram shows the circuitry between the PIAs and the GPIB, including schematic sheet references.

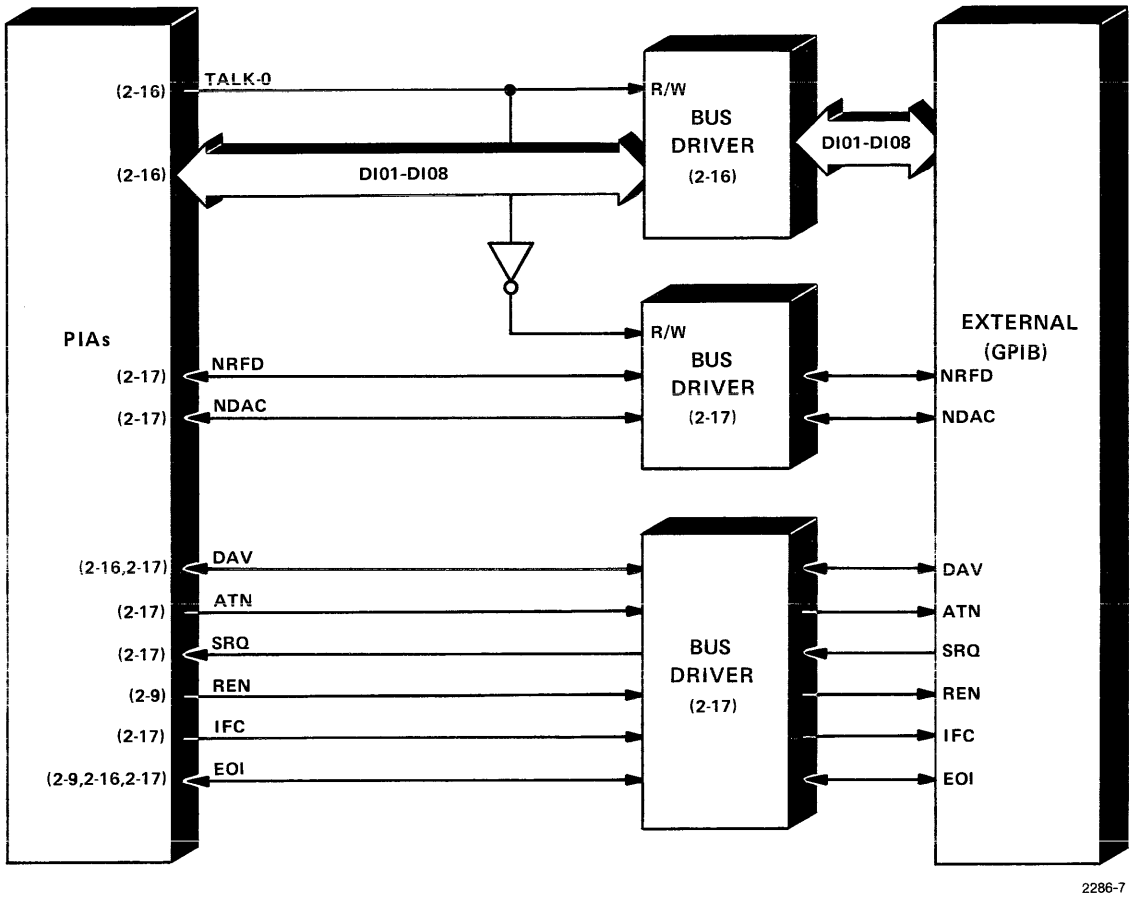

Fig. 1-7. General Purpose Interface Bus (GPIB) block diagram.

The Firmware Backpack circuitry is illustrated by Fig. 1-8. The backpacks contain a bank switch register that allows selected firmware backpacks and optional interfaces to be addressed by the microprocessor.

TIMING

The following system timing diagrams (Figs. 1-9 and 1-10) are included here as a ready reference to system troubleshooting. Detailed description of the associated circuitry resides in Volume 1.

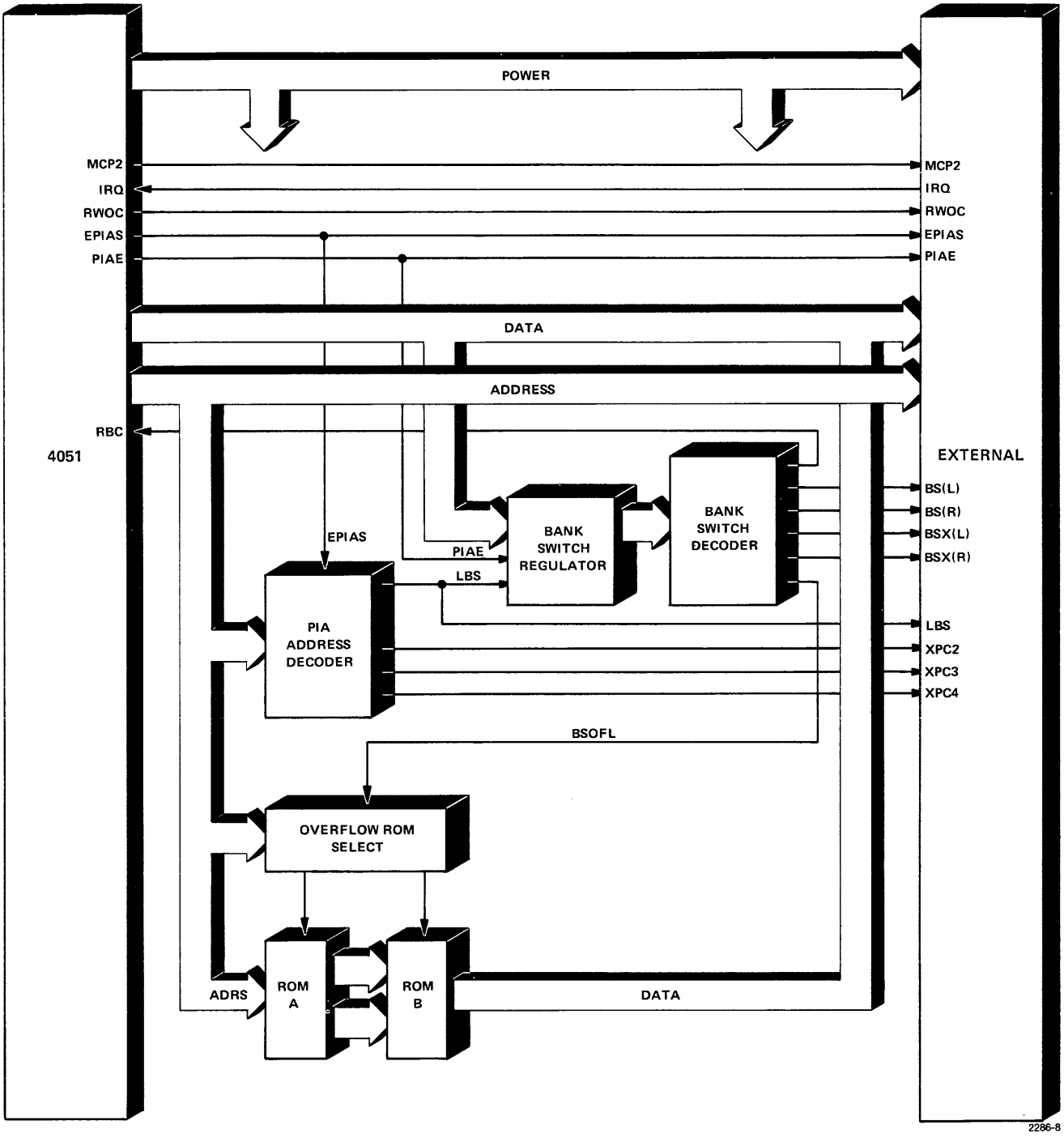

Fig. 1-8. Block diagram Firmware Backpack circuitry.

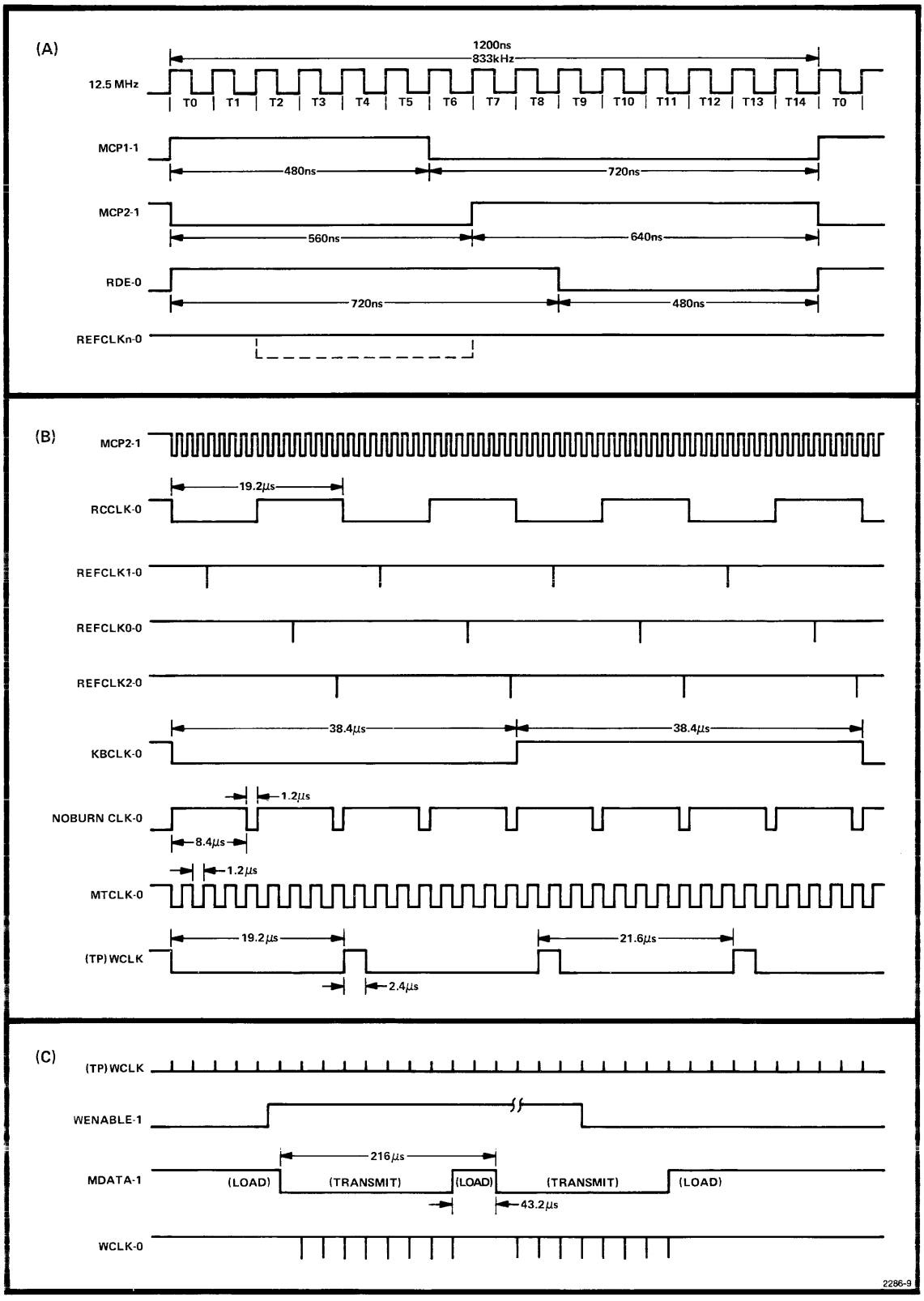

Fig. 1-9. 4051 Graphic System control timing: a) processor timing, b) memory refresh and system clocks, c) tape control timing.

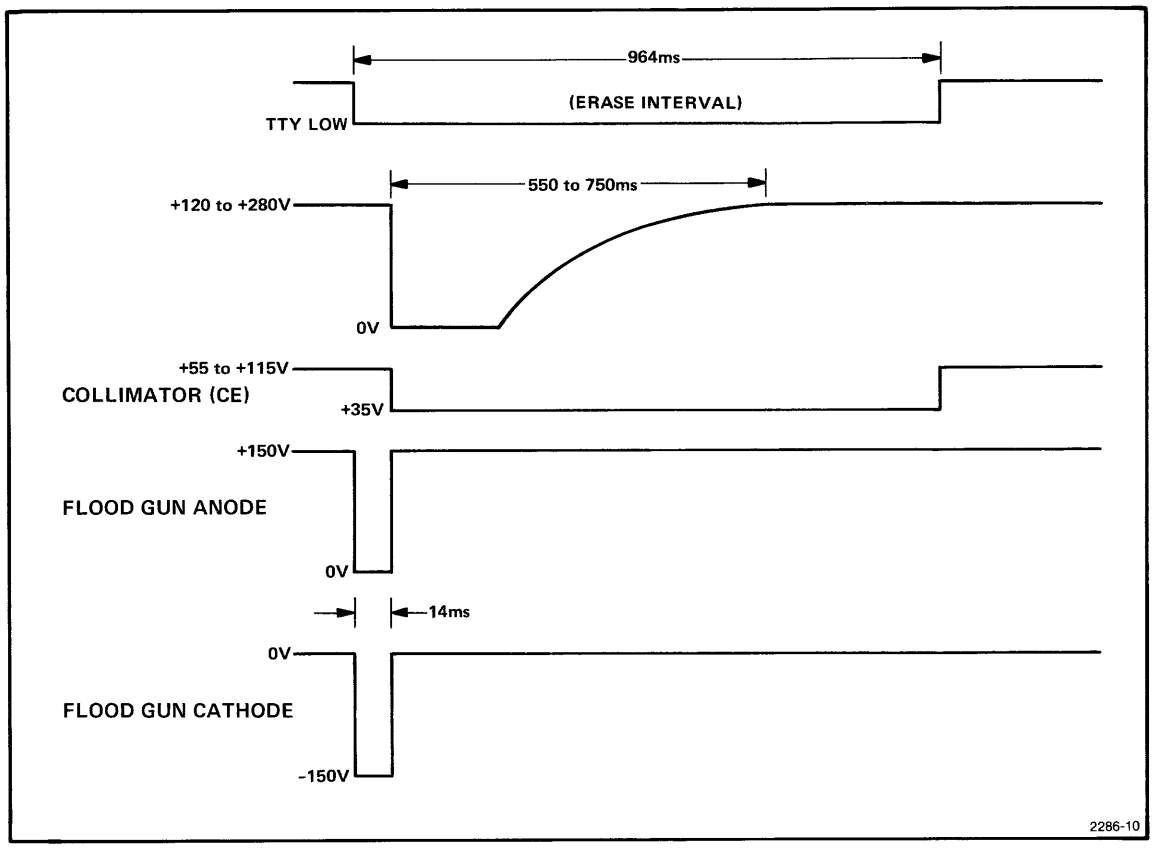

Fig. 1-10. Display erase timing and voltage waveforms.

MEMORY ADDRESSING AND PIA DATA

Figure 1-11 is a memory address allocation map for the 4051 Graphic System. Following the address map are tables of peripheral interface adapters (PIAs) showing their data line and control line assignments.

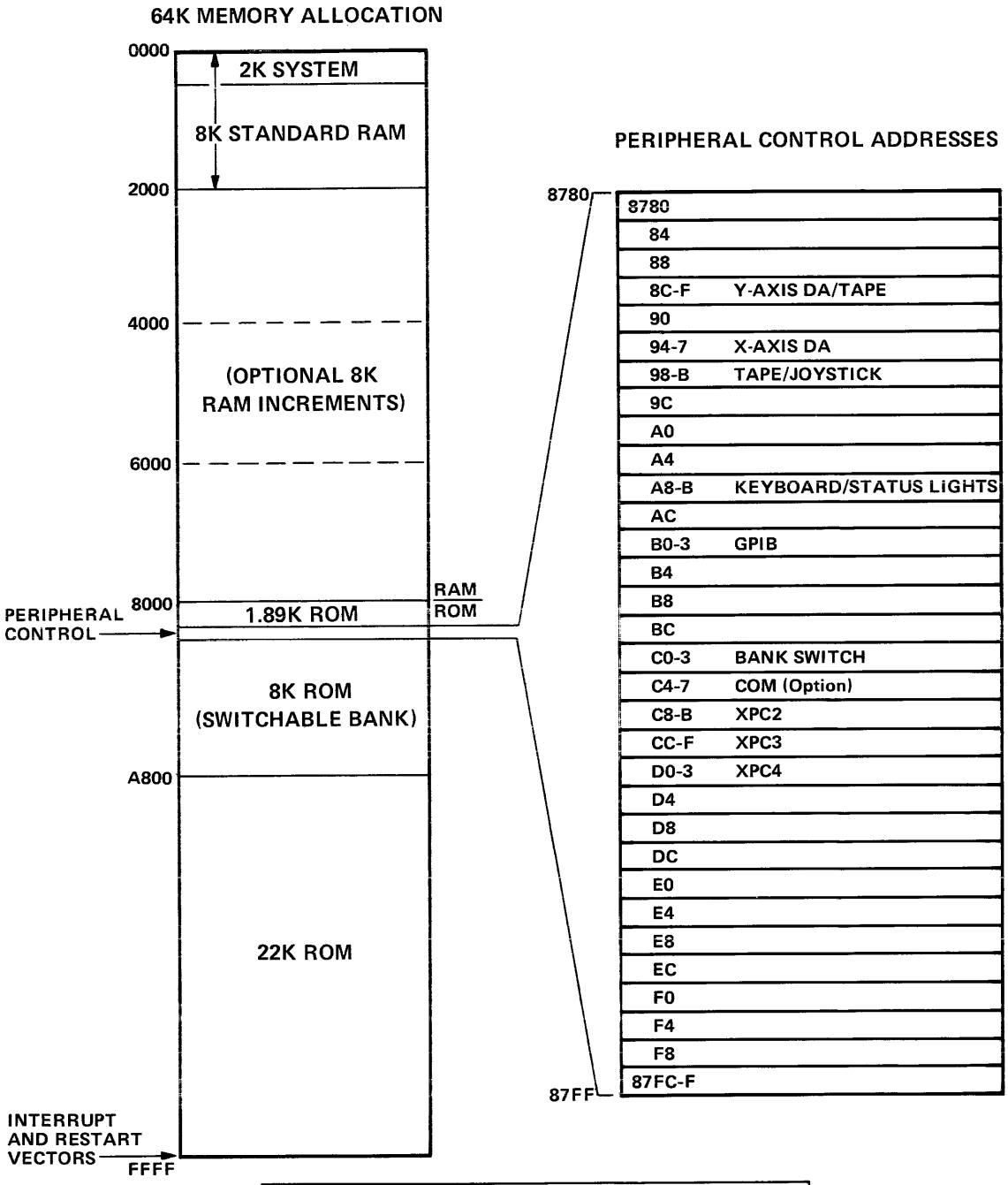

DIVISION	ADDRESS BOUNDARIES
Standard RAM	0000-1FFF
Optional RAM	2000-7FFF
1.89K ROM	8000-877F
Peripheral Control	8780-87FF
8K Switchable Bank	8800-A7FF
22K ROM	A800-FFF7
Interrupt Vector	FFF8-FFF9
Restart Vector	FFFE-FFFF

2286-11

Fig. 1-11. 4051 memory address allocation map.

PIA #U461/Keyboard PIA
Hex Address: 87A8-B

CONTROL LINES

PIA	Schem.	Line & Remarks
IRQA	(2-9)	IRQ-0 (Processor Interrupt)
IRQB	(2-9)	IRQ-0 (Processor Interrupt)
CA1	(2-9)	KEY-1 (Input)
CA2	(2-9)	KB HALT-1 (Output)
CB1		
CB2		

DATA LINES

PIA	Schem.	Line & Remarks
PA0	(2-9)	KC0-1 (Input)
PA1	(2-9)	KC1-1 (Input)
PA2	(2-9)	KC2-1 (Input)
PA3	(2-9)	KC3-1 (Input)
PA4	(2-9)	KC4-1 (Input)
PA5	(2-9)	KC5-1 (Input)
PA6	(2-9)	KC6-1 (Input)
PA7	(2-9)	TTY-0 (input)
PB0	(2-9)	SHIFT-0 (Input)
PB1	(2-9)	CTRL-0 (Input)
PB2		
PB3	(2-9)	LOAD-0 (Input)
PB4	(2-9)	EOI-1 (Output)
PB5	(2-9)	BREAK-1 (Output)
PB6	(2-9)	I/O-1 (Output)
PB7	(2-9)	BUSY-1 (Output)/REN-0 (Output)

PIA #U565/X Axis PIA
Hex Address: 8794-7

CONTROL LINES

PIA	Schem.	Line & Remark
IRQA	(2-10)	IRQ-0 (Processor Interrupt)
IRQB	(2-10)	IRQ-0 (Processor Interrupt)
CA1		
CA2	(2-10)	ADOT-0 (Output)
CB1	(2-10)	VIEWCAUSE-1 (Input)
CB2	(2-10)	BUFCLK-0 (Output)

DATA LINES

PIA	Schem.	Line & Remark	
PA0	(2-10)	(Output)	X D/A
PA1	(2-10)	(Output)	
PA2	(2-10)	DRBUSY-0 (Input)	
PA3	(2-10)	VPULSE-1 (Input)	
PA4	(2-10)	ERASE-0 (Output)	
PA5	(2-10)	COPY-0 (Output)	
PA6	(2-10)	VECTOR-0 (Output)	
PA7	(2-10)	VEN-1 (Output)	
PB0	(2-10)	(Output)	
PB1	(2-10)	(Output)	
PB2	(2-10)	(Output)	
PB3	(2-10)	(Output)	X D/A
PB4	(2-10)	(Output)	
PB5	(2-10)	(Output)	
PB6	(2-10)	(Output)	
PB7	(2-10)	(Output)	

PIA #561/Tape PIA/Y Axis PIA
Hex Address: 878C-F

CONTROL LINES

PIA	Schem.	Line & Remarks
IRQA	(2-14)	NMI-0 (Processor Interrupt)
IRQB	(2-14)	NMI-0 (Processor Interrupt)
CA1	(2-11)	RDBYTE-1 (Input)
CA2	(2-11)	SOT-0 (Output)
CB1	(2-14)	MDATA-1 (Input)
CB2	(2-14)	FMARK-1 (Input)

DATA LINES

PIA	Schem.	Line & Remarks	
PA0	(2-11)	SA0 (Input—Tape)	(Output—Y D/A)
PA1	(2-11)	SA1 (Input—Tape)	
PA2	(2-11)	SA2 (Input—Tape)	
PA3	(2-11)	SA3 (Input—Tape)	(Output—Y CHAR D/A)
PA4	(2-11)	SA4 (Input—Tape)	
PA5	(2-11)	SA5 (Input—Tape)	
PA6	(2-11)	SA6 (Input—Tape)	(Output—X CHAR D/A)
PA7	(2-11)	SA7 (Input—Tape)	
PB0	(2-11)	SB0 (Output—Tape)	
PB1	(2-11)	SB1 (Output—Tape)	
PB2	(2-11)	SB2 (Output—Tape)	
PB3	(2-11)	SB3 (Output—Tape)	(Output—Y D/A)
PB4	(2-11)	SB4 (Output—Tape)	
PB5	(2-11)	SB5 (Output—Tape)	
PB6	(2-11)	SB6 (Output—Tape)	
PB7	(2-11)	SB7 (Output—Tape)	

PIA #U361/Tape PIA
Hex Address: 8798-B

CONTROL LINES

PIA	Schem.	Line & Remarks
IRQA	(2-14)	NMI-0 (Processor Interrupt)
IRQB	(2-14)	NMI-0 (Processor Interrupt)
CA1	(2-15)	RMARK-1 (Input)
CA2	(2-15)	FILFND-1 (Input)
CB1	(2-14)	LOHOLE-1 (Input)
CB2	(2-14)	UPHOLE-1 (Input)

DATA LINES

PIA	Schem.	Line & Remarks
PA0	(2-15)	DELAY OUT-1 (Input)
PA1	(2-15)	LDCLK-1 (Output)
PA2	(2-15)	TUTS-1 (Input)
PA3	(2-15)	SAFE-1 (Input)
PA4	(2-15)	SAFE-1 (Input)
PA5	(2-15)	XERR-1 (Input—Joystick)
PA6	(2-15)	FILFND-1 (Input)
PA7	(2-15)	YERR-1 (Input—Joystick)
PB0	(2-14)	WR-0 (Output)
PB1	(2-14)	FAST-1 (Output)
PB2	(2-14)	REV-1 (Output)
PB3	(2-14)	DRTAPE-0 (Output)
PB4	(2-14)	GICG-1 (Output)
PB5	(2-14)	FICG-1 (Output)
PB6	(2-14)	WENABLE-1 (Output)
PB7	(2-14)	FSENABLE-0 (Output)

PIA #U265/GPIB PIA
Hex Address: 87B0-3

CONTROL LINES

PIA	Schem	Line & Remarks
IRQA	(2-16)	IRQ-0 (Processor Interrupt)
IRQB	(2-16)	IRQ-0 (Processor Interrupt)
CA1	(2-16)	EOI-1 (Input)
CA2	(2-16)	DAV-1 (Output)
CB1	(2-17)	SRQ-1 (Input)
CB2	(2-16)	TALK-1 (Output)

DATA LINES

PIA	Schem.	Line & Remarks
PA0	(2-16)	DIO1-1 (Bidirectional)
PA1	(2-16)	DIO2-1 (Bidirectional)
PA2	(2-16)	DIO3-1 (Bidirectional)
PA3	(2-16)	DIO4-1 (Bidirectional)
PA4	(2-16)	DIO5-1 (Bidirectional)
PA5	(2-16)	DIO6-1 (Bidirectional)
PA6	(2-16)	DIO7-1 (Bidirectional)
PA7	(2-16)	DIO8-1 (Bidirectional)
PB0	(2-17)	EOI-1 (Output)
PB1	(2-17)	IFC-1 (Output)
PB2		
PB3	(2-17)	ATN-0 (Output)
PB4	(2-17)	NRFD (Bidirectional)
PB5	(2-17)	SRQ-1 (Input)
PB6	(2-17)	DAV-1 (Input)
PB7	(2-17)	NDAC (Bidirectional)

PIA#U5/Communications PIA
Hex Address: 87C0-3

CONTROL LINES

PIA	Schem.	Line & Remarks
IRQA	(10-1)	IRQ-0 (Processor Interrupt)
IRQB	(10-1)	IRQ-0 (Processor Interrupt)
CA1	(10-1)	SRX (Input)
CA2		
CB1	(10-1)	DTR (DCD) (Input)
CB2	(10-1)	RTS (CTS) (Input)

DATA LINES

PIA	Schem	Line & Remarks
PA0		
PA1		
PA2		
PA3	(10-1)	(Output)
PA4	(10-1)	(Output) Bank Switch Register
PA5	(10-1)	(Output)
PA6		
PA7		
PB0	(10-1)	SRX (Input)
PB1	(10-1)	DTR (DCD) (Input)
PB2	(10-1)	RTS (CTS) (Input)
PB3	(10-1)	CTS (RTS) (Output)
PB4	(10-1)	STXA-C (Output)
PB5	(10-1)	(Output)
PB6	(10-1)	(Output) Baud Rate Select
PB7	(10-1)	(Output)

Section 2

CROSS-REFERENCE DATA

This cross-reference list contains all signal mnemonics used in a 4051 Graphic System and the 4051 schematic sheets on which the signals are located. Once a signal name has been identified, locate the signal name in the following alphabetized list. The number pairs to the right indicate the schematic sheets on which this signal may be found. Table 2-1 specifies which circuit board and schematic sheets go together.

Table 2-1

SCHEMATIC ASSIGNMENT CHART

1-X	Power Supply
2-X	CPU Board
3-X	Memory Board
4-X	Display Board
5-X	Keyboard
6-X	Tape Drive Board
7-X	Tape Status Board
8-X	Indicator Board
9-X	Firmware Backpack
10-X	Communications Interface
11-X	Communications ROM Board

4051 MNEMONIC CROSS-REFERENCE LIST

NAME	SCHEMATICS
+12 V	1-1, 10-1, 10-2, 11-1, 2-1, 2-4, 2-5, 2-7, 2-8, 2-9, 3-1, 3-2, 3-3, 3-4
+12 V DECOUPLED	1-1
+12 V	2-1, 8-1, 9-1
+15 V	1-1, 2-1, 2-12, 4-2, 4-2A, 4-3, 4-4, 4-6, 4-7, 6-2, 6-3
+15V1	2-1, 2-10, 2-11, 4-2, 4-2A, 4-6, 6-1, 6-3
+15 V2	4-1, 4-3, 4-5
+15 V3	4-4, 4-7
+150 V	4-4, 4-2, 4-2A, 4-6, 4-7
+174 V	4-4, 4-7
+175 V	4-2, 4-2A, 4-6
+185 V	4-2, 4-2A, 4-6
+185 V UNREG	1-1, 1-2
+185 V1	4-2, 4-2A, 4-6
+20 V	4-2, 4-2, 4-2A, 4-2A, 4-3, 4-6, 4-7, 6-3
+20 V UNREG	1-1
+320 V	4-2, 4-2A, 4-4, 4-6, 4-7
+320 V UNREG	1-2
+320 V1	4-2, 4-2A, 4-6
+320 V2	4-4, 4-7
+5 V	1-2, 10-1, 10-2, 11-1, 2-1, 2-10, 2-11, 2-12, 2-13, 2-14, 2-15, 2-16, 2-17, 2-3, 2-4, 2-5, 2-6, 2-7, 2-8, 2-9, 3-1, 3-2, 3-3, 3-4, 4-1, 4-2, 4-2A, 4-4, 4-5, 4-6, 4-7, 5-1, 6-1, 6-3, 7-1, 9-1
+5 V REP	1-1, 1-2
+5 V1	4-4
−11.5 V	2-1, 2-10, 2-11
−12 V	1-1, 10-1, 10-2, 2-1, 2-12, 2-9, 3-2, 4-2, 4-2A, 4-3, 4-4, 4-5, 4-6, 4-7, 6-2, 6-3, 9-1
−12 V DECOUPLED	1-1
−12 V1	4-2, 4-2A, 4-6, 6-1, 6-3
−12 V2	4-2, 4-2A, 4-6
−12 V3	4-1, 4-3, 4-5
−12 V4	4-4, 4-7
−20 V	4-2, 4-2A, 4-3, 4-5, 4-6, 4-7, 6-3
−20 V LIMITED	1-1, 2-1, 2-12
−20 V UNREG	1-1
−3 V	11-1
−5 V	2-4, 2-5, 2-7, 2-8, 3-2, 3-3, 3-4
−5 V1	2-1, 2-4, 2-5

NAME	SCHEMATICS
−5 V2	2-1, 2-7, 2-8
AB0-1	10-1, 10-2, 11-1, 2-10, 2-11, 2-14, 2-16, 2-3 2-4, 2-5, 2-6, 2-9, 9-1, 9-2
AB1-1	10-1, 10-2, 11-1, 2-10, 2-11, 2-14, 2-16, 2-3 2-4, 2-5, 2-6, 2-9, 9-1, 9-2
AB2-1	10-1, 10-2, 11-1, 2-10, 2-11, 2-14, 2-3, 2-4, 2-6, 9-1, 9-2
AB3-1	10-1, 10-2, 11-1, 2-11, 2-14, 2-3, 2-4, 2-5, 2-6, 2-9, 9-1, 9-2
AB4-1	10-1, 10-2, 11-1, 2-10, 2-14, 2-16, 2-3, 2-5, 2-6, 9-1, 9-2
AB5-1	10-1, 10-2, 11-1, 2-16, 2-3, 2-4, 2-5, 2-6, 2-9, 9-1, 9-2
AB6-1	10-2, 11-1, 2-3, 2-4, 2-5, 2-7, 2-8, 3-1, 3-3, 3-4, 9-1, 9-2
AB7-1	10-2, 11-1, 2-3, 2-4, 2-5, 2-7, 2-8, 3-1, 3-3, 3-4, 9-1, 9-2
AB8-1	10-2, 11-1, 2-4, 2-5, 2-7, 2-8, 3-1, 3-3, 3-4, 9-1, 9-2
AB9-1	10-2, 11-1, 2-3, 2-4, 2-5, 2-7, 2-8, 3-1, 3-3, 3-4, 9-1, 9-2
AB10-1	10-2, 11-1, 2-3, 2-4, 2-5, 2-7, 2-8, 3-1, 3-3 3-4, 9-1, 9-2
AB11-1	10-2, 11-1, 2-3, 2-4, 2-7, 2-8, 3-1, 3-3, 3-4, 9-2
AB12-1	10-2, 11-1, 2-3, 2-4, 2-6, 9-2
AB13-1	10-2, 11-1, 2-3, 2-4, 9-2
AB14-1	10-2, 11-1, 2-3, 2-4, 2-6, 9-2
AB15-1	10-2, 11-1, 2-3, 2-4, 2-6, 9-2
ABA-1	2-3
AC-LINE-VOLTAGE	1-1
ADOT-0	2-10, 2-13
ANODE	4-2, 4-2, 4-4, 2-6, 2-7
ATN-0	2-17
ATN-1	2-17
BIAS	2-11, 4-1, 4-3
BREAK-0	8-1, 2-9
BS(L)-0	10-1, 10-2, 9-1
BS(R)-0	10-1, 10-2, 9-1
BSCOM-0	10-1, 10-2, 11-1
BSEXT-0	10-1, 10-2, 11-1
BSX(L)	9-1, 10-1, 10-2
BSX(R)	9-1, 10-1, 10-2

NAME	SCHEMATICS
BUFCLK-1	2-10, 2-11, 2-12, 2-13
BUSY-0	8-1, 2-9
CE1	4-2
CE2	4-2
CHASSIS GND	4-2, 4-2A, 4-3, 4-4, 4-5, 4-6, 4-7
COPY-0	4-1, 2-10, 4-5
COPYEN-1	4-1, 4-2, 4-5, 4-6
CS-0	2-7, 2-8, 3-1, 3-2, 3-3, 3-4
CTRL-0	2-9, 5-1
CTS	10-1
DAV-0	2-17
DAV-1	2-16, 2-17
DB0-1	9-1, 10-1, 10-2, 11-1, 2-10, 2-11, 2-14, 2-16, 2-3, 2-4, 2-5, 2-7, 2-9
DB1-1	9-1, 10-1, 10-2, 11-1, 2-10, 2-11, 2-14, 2-16, 2-3, 2-4, 2-5, 2-7, 2-9
DB2-1	9-1, 10-1, 10-2, 11-1, 2-10, 2-11, 2-14, 2-16, 2-3, 2-4, 2-5, 2-7, 2-9
DB3-1	9-1, 10-1, 10-2, 11-1, 2-10, 2-11, 2-14, 2-16, 2-3, 2-4, 2-5, 2-7, 2-9
DB4-1	9-1, 10-1, 10-2, 11-1, 2-10, 2-11, 2-14, 2-16, 2-3, 2-4, 2-5, 2-8, 2-9
DB5-1	9-1, 10-1, 10-2, 11-1, 2-10, 2-11, 2-14, 2-16, 2-3, 2-4, 2-5, 2-8, 2-9
DB6-1	9-1, 10-1, 10-2, 11-1, 2-10, 2-11, 2-14, 2-16, 2-3, 2-4, 2-5, 2-8, 2-9
DB7-1	9-1, 10-1, 10-2, 11-1, 2-10, 2-14, 2-16, 2-3, 2-4, 2-5, 2-8, 2-9
DCD	10-1
DELAY IN-1	6-3, 2-14
DELAY OUT-1	6-3, 2-15
DIO1-0	2-16
DIO2-0	2-16
DIO3-0	2-16
DIO4-0	2-16
DIO5-0	2-16
DIO6-0	2-16
DIO7-0	2-16
DIO8-0	2-16
DRBUSY-0	2-10, 2-13, 4-2
DRTAPE-0	2-14, 2-15, 6-2
DSR	10-1

NAME	SCHEMATICS
DTR	10-1
DYNAMIC FOCUS	4-3, 4-4
EMI0-1	2-7, 3-1, 3-3
EMI1-1	2-7, 3-1, 3-3
EMI2-1	2-7, 3-1, 3-3
EMI3-1	2-7, 3-1, 3-3
EMI4-1	2-8, 3-2, 3-4
EMI5-1	2-8, 3-2, 3-4
EMI6-1	2-8, 3-2, 3-4
EMI7-1	2-8, 3-2, 3-4
EMO0-0	2-7, 3-1, 3-3
EMO1-0	2-7, 3-1, 3-3
EMO2-0	2-7, 3-1, 3-3
EMO3-0	2-7, 3-1, 3-3
EMO4-0	2-8, 3-2, 3-4
EMO5-0	2-8, 3-2, 3-4
EMO6-0	2-8, 3-2, 3-4
EMO7-0	2-8, 3-2, 3-4
EOI-0	2-17
EOI-1	2-16, 2-17, 2-9
EPIAS-0	2-4, 10-1, 10-2, 9-2
ERASE-0	2-10, 4-2
F.G. HEATER	1-1, 4-2
FAST-1	2-14, 6-2
FICG-0	2-14, 2-15
FILFND-1	2-14, 2-15
FMARK-1	2-14, 2-15
FOCUS	4-4
FSENABLE-0	2-14
GICG-1	2-14
GND	1-1, 10-2, 11-1, 2-1, 2-4, 2-5, 2-7, 2-9, 3-2 4-1, 4-2, 4-2A, 4-3, 4-5, 4-6, 4-7, 5-1, 6-3, 7-1, 8-1, 9-1
H.V. GND	4-4
HALT-0	2-3
I/O-1	2-9, 8-1
IFC-0	2-17
IFC-1	2-17
INTER-0	4-1
IPIAS-0	2-10, 2-11, 2-14, 2-16, 2-4, 2-9
IRQ-0	10-1, 10-2, 2-10, 2-16, 2-3, 2-9, 9-2
KBCLK-0	2-9, 5-1

NAME	SCHEMATICS
KBCOPY-0	4-1, 4-5
KBHALT-1	2-9, 5-1
KC0-1	2-9, 5-1
KC1-1	2-9, 5-1
KC2-1	2-9, 5-1
KC3-1	2-9, 5-1
KC4-1	2-9, 5-1
KC5-1	2-9, 5-1
KC6-1	2-9, 5-1
KEY-1	5-1, 2-9
LAMP ON	6-2, 7-1
LAMP ON RET.	6-2, 7-1
LBS-0	10-1, 10-2, 9-1, 9-2
LDCLK-1	2-15
LOAD SW	7-1
LOAD-1	2-15, 2-9
LOADED	6-3
LOADED-1	6-3, 2-15
LOHOLE	6-2, 7-1
LOHOLE-1	2-14, 6-2
MAB0-1	2-6, 2-7, 2-8, 3-1, 3-3, 3-4
MAB1-1	2-6, 2-7, 2-8, 3-1, 3-3, 3-4
MAB2-1	2-6, 2-7, 2-8, 3-1, 3-3, 3-4
MAB3-1	2-6, 2-7, 2-8, 3-1, 3-3, 3-4
MAB4-1	2-6, 2-7, 2-8, 3-1, 3-3, 3-4
MAB5-1	2-6, 2-7, 2-8, 3-1, 3-3, 3-4
MAB6-1	2-6, 2-7, 2-8, 3-1, 3-3, 3-4, 3-2
MAB7-1	2-6, 2-7, 2-8, 3-1, 3-3, 3-4, 3-2
MAB8-1	2-6, 2-7, 2-8, 3-1, 3-2, 3-3, 3-4
MAB9-1	2-6, 2-7, 2-8, 3-1, 3-2, 3-3, 3-4
MAB10-1	2-6, 2-7, 2-8, 3-1, 3-2, 3-3, 3-4
MAB11-1	2-6, 2-7, 2-8, 3-1, 3-2, 3-3, 3-4
MAKE COPY-0	4-1, 4-5
MCP1-0	2-2, 2-3
MCP1-1	2-2
MCP2-0	2-2, 2-3
MCP2-1	10-2, 9-2, 2-2, 2-3, 2-6, 2-7
MDATA-1	2-14
MRDATA-1	10-1, 2-15, 6-1
MTCLK-0	2-14
NDAC-0	2-17
NDAC-1	2-17

NAME	SCHEMATICS
NMI-0	2-3, 2-14
NOBURN CLK-0	2-12, 2-2
NODRIVE-1	6-1, 6-2
NRFD-0	2-17
NRFD-1	2-17
OFA-0	9-1, 9-2
OFB-0	9-1, 9-2
OFSEL-0	9-1, 9-2
ORIGIN-0	4-1, 4-2, 4-5, 4-6
PIAE-1	10-1, 10-1, 10-2, 9-2, 2-10, 2-11, 2-14, 2-16
	2-3, 2-9
PIAS-0	2-4
R/W-0	2-3, 2-7
R/W-1	2-10, 2-11, 2-14, 2-16, 2-3, 2-9
RAMP	6-2, 6-3
RAMS0-0	2-6, 2-7
RAMS1-0	2-6, 2-7
RAMS2-0	2-6, 3-1
RAMS3-0	2-6, 3-1
RAMS4-0	2-6, 3-1
RAMS5-0	2-6, 3-3
RAMS6-0	2-6, 3-3
RAMS7-0	2-6, 3-3
RAMW-0	2-7, 2-8, 3-1, 3-2, 3-3, 3-4
RBC-0	10-1, 10-2
RBC-1	2-4, 9-1
RCCLK-0	2-2, 2-6
RCE0-1	2-8
RCE1-1	2-7, 2-8
RCE2-1	3-1, 3-2
RCE3-1	3-1, 3-2
RCE4-1	3-1, 3-2
RCE5-1	3-3, 3-4
RCE6-1	3-3, 3-4
RCE7-1	3-3, 3-4
RCLK-1	2-15, 6-1
RDBYTE-1	2-11, 2-14, 2-15
RDE-0	2-2, 2-6
READ-0	4-1, 4-5
REFCLK0-0	2-2, 2-7
REFCLK1-0	2-2, 3-1
REFCLK2-0	2-2, 3-3

NAME	SCHEMATICS
REN-0	2-17
REN-1	2-17, 2-9, 2-17, 2-9
RES-0	2-10, 2-11, 2-14, 2-16, 2-3, 2-9, 2-10, 2-11, 2-14, 2-16, 2-9
RESTART-0	2-3, 1-2, 10-1, 10-2, 2-15, 2-3, 6-1, 6-2, 9-1
REV-1	2-14, 6-2
RMARK-1	2-15
ROMDIS-1	2-4
ROME5-0	2-4, 2-5
ROME6-0	2-4, 2-5
ROME7-0	2-4, 2-5
ROME8-0	2-4, 2-5
ROME9-0	2-4, 2-5
ROME10-0	2-4, 2-5
ROME11-0	2-4, 2-5
ROME12-0	2-4, 2-5
ROME13-0	2-4, 2-5
ROME14-0	2-4, 2-5
ROME15-0	2-4, 2-5
RTS	10-1
RWIC-0	2-7, 2-8
RWOC-1	10-1, 2-7, 10-1, 10-2, 9-2
SA0	2-11, 2-15
SA1	2-11, 2-15
SA2	2-11, 2-15
SA3	2-11, 2-15
SA4	2-11, 2-15
SA5	2-11, 2-15
SA6	2-11, 2-15
SA7	2-11, 2-15
SAFE	6-1
SAFE SW	7-1
SAFE-1	2-15
SB0	2-11, 2-14
SB1	2-11, 2-14
SB2	2-11, 2-14
SB3	2-11, 2-14
SB4	2-11, 2-14
SB5	2-11, 2-14
SB6	2-11, 2-14
SB7	2-11, 2-14
SHIFT-0	2-13, 2-9, 5-1

NAME	SCHEMATICS
SIG GND	4-1, 4-3, 4-5
SOT-0	2-11, 2-13, 2-14
SPARE	4-2, 4-6
SPEAKER	2-9, 8-1
SRQ-0	2-17
SRQ-1	2-17
SRX	10-1
STB	4-2, 4-6
STXA	10-1
STXC	10-1
TALK-0	2-16, 2-17
TALK-1	2-16, 2-17
TARSIG-0	4-1, 4-5
TARSIG-1	4-1, 4-2, 4-5, 4-6
TDATA	10-1
TNIM-1	2-15, 6-2
TTY-0	2-9, 5-1
TUTS	2-15
TUTS-1	6-2
UPHOLE	6-2, 7-1
UPHOLE-1	2-14, 6-2
VECTOR-0	2-10, 2-12
VEN-0	2-12, 2-13
VEN-1	2-10, 2-13
VIEW-1	2-13, 4-2
VIEWCAUSE-1	2-10, 2-13
VMA-0	2-3
VPULSE-1	2-10, 2-12
WAIT-0	4-1, 4-5
WCLK-0	2-14, 6-1
WDATA-1	2-14, 6-1
WENABLE-1	2-14
WR-0	2-14, 6-1
X	2-12, 4-1, 4-5
X AMP	4-1, 4-3, 4-5
X D/A	2-10, 2-12, 2-9
X DFL COIL	4-3, 4-5
X GEOM	4-3
X GND	4-1
X HC RAMP IN	4-1
XCHAR D/A	2-10, 2-11
XERR-1	2-15, 2-9

NAME	SCHEMATICS
XJOY	2-9
XPC2-0	10-1, 10-2, 9-2
XPC3-0	10-1, 10-2, 9-2
XPC4-0	10-1, 10-2, 9-2
Y	2-12, 4-1, 4-5
Y AMP	4-1, 4-3, 4-5
Y D/A	2-11, 2-12, 2-9
Y DFL COIL	4-3, 4-5
Y GEOM	4-3
Y GND	4-1, 4-5
Y HC RAMP IN	4-1, 4-5
Y RAMP RET	4-1, 4-5
YCHAR D/A	2-11
YERR-1	2-15, 2-9
YJOY	2-9
Z GND	4-1, 4-5
Z MPX-0	4-1, 4-4, 4-5, 4-7
Z-0	2-13, 4-1, 4-5
ZVECT-0	2-12, 2-13

Section 3

WIRE HARNESS

This section contains wire harness information for 4051 Graphic Systems. Fig. 3-1 shows the approximate location of wire harness connectors and board locations throughout the system. The connector tables show the wire connections between connectors. A wire color code is given in numerical form according to Table 3-1. In many cases, the least significant digit of a connector number also corresponds to the color of the plug or jack that goes on that connector.

Table 3-1

WIRE COLOR INFORMATION

CODE	MEANING
empty	ribbon cable—single color
N	no secondary color
1-2	1=primary color (Brown) 2=secondary color (Red)
0	BLACK
1	BROWN
2	RED
3	ORANGE
4	YELLOW
5	GREEN
6	BLUE
7	VIOLET
8	GRAY
9	WHITE

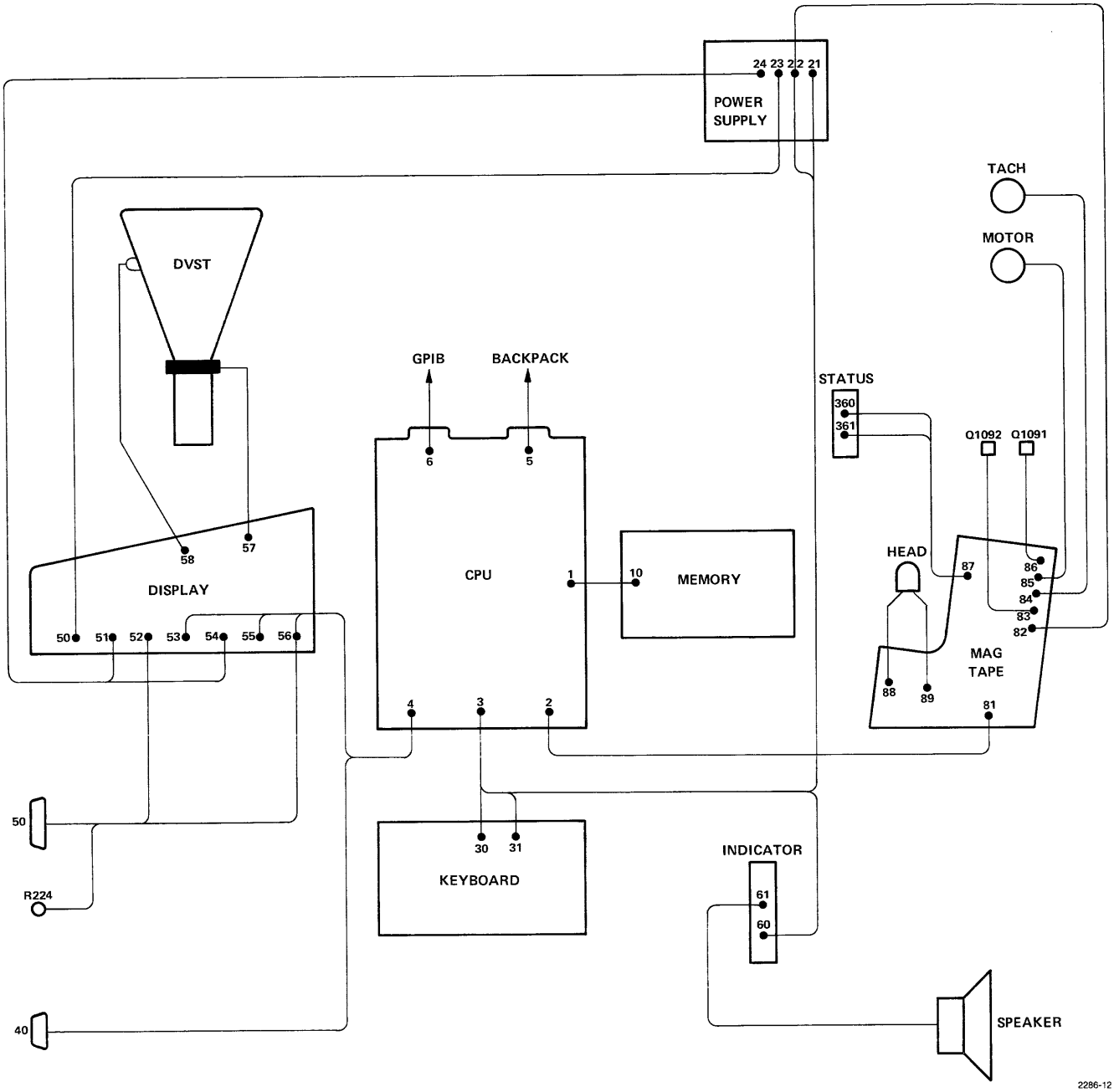

Fig. 3-1. 4051 cabling diagram.

CPU BOARD

J1	SIGNAL	WIRE COLOR	DESTINATION
1	+12 V		J10-1
2	+12 V		J10-2
3	+12 V		J10-3
4	REFCLK1-0		J10-4
5	GND		J10-5
6	RAMS2-0		J10-6
7	GND		J10-7
8	GND		J10-8
9	GND		J10-9
10	EMI2-1		J10-10
11	EMO1-0		J10-11
12	EMI1-1		J10-12
13	EMO0-0		J10-13
14	EMI0-1		J10-14
15	EMI3-1		J10-15
16	EMO3-0		J10-16
17	MAB2-1		J10-17
18	MAB0-1		J10-18
19	MAB4-1		J10-19
20	MAB1-1		J10-20
21	MAB3-1		J10-21
22	EMO6-0		J10-22
23	GND		J10-23
24	RAMS5-0		J10-24
25	REFCLK2-0		J10-25
26	+5 V		J10-26
27	−12 V		J10-27
28	GND		J10-28
29	RAMS3-0		J10-29
30	RAMS4-0		J10-30
31	EMO2-0		J10-31
32	RAMW-0		J10-32
33	CS-0		J10-33
34	MAB5-1		J10-34
35	MAB6-1		J10-35
36	EMI4-1		J10-36
37	EMO4-0		J10-37
38	MAB7-1		J10-38
39	MAB9-1		J10-39
40	MAB8-1		J10-40

CPU BOARD (cont)

J1	SIGNAL	WIRE COLOR	DESTINATION
41	MAB11-1		J10-41
42	MAB10-1		J10-42
43	EMI5-1		J10-43
44	EMO5-0		J10-44
45	EMI7-1		J10-45
46	EMO7-0		J10-46
47	EMI6-1		J10-47
48	RAMS7-0		J10-48
49	GND		J10-49
50	RAMS6-0		J10-50

CPU BOARD (cont)

J2	SIGNAL	WIRE COLOR	DESTINATION
1	RESTART-0		J81-1
2	GND		J81-2
3	GND		J81-3
4	GND		J81-4
5	GND		J81-5
6	GND		J81-6
7	GND		J81-7
8	GND		J81-8
9	GND		J81-9
10	GND		J81-10
11	GND		J81-11
12	GND		J81-12
13	GND		J81-13
14	−12 V		J81-14
15	+5 V		J81-15
16	+5 V		J81-16
17	+5 V		J81-17
18	+15 V		J81-18
19	LOADED-1		J81-19
20	RCLK-1		J81-20
21	WCLK-0		J81-21
22	MRDATA-1		J81-22
23	TUTS-1		J81-23
24	WDATA-1		J81-24
25	TNIM-1		J81-25
26	DELAY OUT-1		J81-26
27	SAFE-1		J81-27
28	LOHOLE-1		J81-28
29	WR-0		J81-29
30	UPHOLE-1		J81-30
31	FAST-1		J81-31
32	REV-1		J81-32
33	DRTAPE-0		J81-33
34	DELAY IN-0		J81-34

CPU BOARD (cont)

J3	SIGNAL	WIRE COLOR	DESTINATION
1			
2	+5 V	9-7	J31-7
3	KBCLK-0	9-6	J31-6
4	GND	9-5	J31-5
5	SHIFT-0	9-4	J31-4
6	CSHIFT-0	9-3	J31-3
7	KBHALT-1	9-2	J31-2
8	KEY-1	9-1	J31-1
9	+12 V	2-1	J60-1
10	BREAK-0	1-4	J60-3
11			
12	SPEAKER	1-6	J60-5
13	−20 V LIMIT	7-1	J22-1
14	+5 V	2-0	J21-10
15	RESTART-0	9-1	J21-8
16	−12 V	7-0	J21-7
17	+15 V	2-3	J21-2
18	GND	0-N	J21-4
19			
20			
21	TTY-0	9-8	J30-8
22	KC6-1	9-7	J30-7
23	KC5-1	9-6	J30-6
24	KC4-1	9-5	J30-5
25	KC3-1	9-4	J30-4
26	KC2-1	9-3	J30-3
27	KC1-1	9-2	J30-2
28	KC0-1	9-1	J30-1
29	I/O-0	1-3	J60-2
30	GND	0-N	J60-6
31			
32	BUSY-0	1-5	J60-4
33	+5 V	2-0	J21-9
34	+12 V	2-1	J21-3
35	−12 V	7-0	J21-6
36	+15 V	2-3	J21-1
37	GND	0-N	J21-5
38			

CPU BOARD (cont)

J4	SIGNAL	WIRE COLOR	DESTINATION
1			
2	Y	9-2 Coax	J55-1
3	Y GND	9-2 Shield	J55-2
4	COPYEN-1	9-5	J59-1
5	Y JOY GND	8-66 (0)	J40-9
6	Y JOY	8-66 (2)	J40-8
7	X JOY GND	8-55 (0)	J40-4
8	X JOY	8-55 (2)	J40-3
9	ERASE-0	9-3	J56-6
10	DRBUSY-0	9-2	J53-7
11	VIEW-1	9-1	J53-5
12			
13			
14	X	9-1 Coax	J55-4
15	X GND	9-1 Shield	J55-3
16	Z-0	9-N Coax	J53-4
17	Z GND	9-N Shield	J53-3
18			
19	−12 V	7-0	J54-3
20	GND	0-N	J54-2
21	+5 V	2-0	J54-9
22	+15 V	2-3	J54-4
23	COPY-0	9-4	J53-2
24			

CPU BOARD (cont)

J5-A	SIGNAL	WIRE COLOR	DESTINATION
A1	AB10-1		P5-A1
A2	ROMDIS-1		P5-A2
A3	HALT-0		P5-A3
A4	PIAS-0		P5-A4
A5	RWOC-1		P5-A5
A6	AB12-1		P5-A6
A7	AB14-1		P5-A7
A8	AB0-1		P5-A8
A9	AB1-1		P5-A9
A10	AB2-1		P5-A10
A11	AB3-1		P5-A11
A12	−12 V		P5-A12
A13	−12 V		P5-A13
A14	RBC-1		P5-A14
A15	DB1-1		P5-A15
A16	DB3-1		P5-A16
A17	IRQ-0		P5-A17
A18	DB6-1		P5-A18
A19	PIAE-1		P5-A19
A20	MCP1-1		P5-A20
A21	REFCLK0-0		P5-A21
A22	REFCLK1-0		P5-A22
A23	MCP2-1		P5-A23
A24	EPIAS-0		P5-A24
A25	+12 V		P5-A25

CPU BOARD (cont)

J5-B	SIGNAL	WIRE COLOR	DESTINATION
B1	GND		P5-B1
B2	GND		P5-B2
B3	+5 V		P5-B3
B4	AB9-1		P5-B4
B5	AB8-1		P5-B5
B6	AB7-1		P5-B6
B7	AB13-1		P5-B7
B8	AB15-1		P5-B8
B9	ABA-1		P5-B9
B10			P5-B10
B11	AB6-1		P5-B11
B12	AB5-1		P5-B12
B13	AB4-1		P5-B13
B14	AB11-1		P5-B14
B15	DB0-1		P5-B15
B16	DB2-1		P5-B16
B17	DB4-1		P5-B17
B18	DB5-1		P5-B18
B19	DB7-1		P5-B19
B20	RESTART-0		P5-B20
B21			P5-B21
B22	REFCLK2-0		P5-B22
B23	RDE-0		P5-B23
B24	+5 V		P5-B24
B25	GND		P5-B25

CPU BOARD (cont)

J6	SIGNAL	WIRE COLOR	DESTINATION
1	DIO1-0		(GPIB)
2	DIO2-0		
3	DIO3-0		
4	DIO4-0		
5	EOI-0		
6	DAV-0		
7	NRFD-0		
8	NDAC-0		
9	IFC-0		
10	SRQ-0		
11	ATN-0		
12	Shield		
13	DIO5-0		
14	DIO6-0		
15	DIO7-0		
16	DIO8-0		
17	REN-0		
18	GND		
19	GND		
20	GND		
21	GND		
22	GND		
23	GND		
24	GND		(GPIB)

MEMORY BOARD

J10	SIGNAL	WIRE COLOR	DESTINATION
1	+12 V		J1-1
2	+12 V		J1-2
3	+12 V		J1-3
4	REFCLK1-0		J1-4
5	GND		J1-5
6	RAMS2-0		J1-6
7	GND		J1-7
8	GND		J1-8
9	GND		J1-9
10	EMI2-1		J1-10
11	EMO1-0		J1-11
12	EMI1-1		J1-12
13	EMO0-0		J1-13
14	EMI0-1		J1-14
15	EMI3-1		J1-15
16	EMO3-0		J1-16
17	MAB2-1		J1-17
18	MAB0-1		J1-18
19	MAB4-1		J1-19
20	MAB1-1		J1-20
21	MAB3-1		J1-21
22	EMO6-0		J1-22
23	GND		J1-23
24	RAMS5-0		J1-24
25	REFCLK2-0		J1-25
26	+5 V		J1-26
27	−12 V		J1-27
28	GND		J1-28
29	RAMS3-0		J1-29
30	RAMS4-0		J1-30
31	EMO2-0		J1-31
32	RAMW-0		J1-32
33	CS-0		J1-33
34	MAB5-1		J1-34
35	MAB6-1		J1-35
36	EMI4-1		J1-36
37	EMO4-0		J1-37
38	MAB7-1		J1-38
39	MAB9-1		J1-39
40	MAB8-1		J1-40

MEMORY BOARD (cont)

J10	SIGNAL	WIRE COLOR	DESTINATION
41	MAB11-1		J1-41
42	MAB10-1		J1-42
43	EMI5-1		J1-43
44	EMO5-0		J1-44
45	EMI7-1		J1-45
46	EMO7-0		J1-46
47	EMI6-1		J1-47
48	RAMS7-0		J1-48
49	GND		J1-49
50	RAMS6-0		J1-50

POWER SUPPLY

J21	SIGNAL	WIRE COLOR	DESTINATION
1	+15 V	2-3	J3-36
2	+15 V	2-3	J3-17
3	+12 V	2-1	J3-34
4	GND	0-N	J3-18
5	GND	0-N	J3-37
6	−12 V	7-0	J3-35
7	−12 V	7-0	J3-16
8	RESTART-0	9-1	J3-15
9	+5 V	2-0	J3-33
10	+5 V	2-0	J3-14

J22	SIGNAL	WIRE COLOR	DESTINATION
1	−20 V LIMIT	7-1	3-13
2	+20 V UNREG	2-49	J82-1
3	GND	0-N	J82-3 (Motor Common)
4	−20 V UNREG	7-19	J82-2

POWER SUPPLY (cont)

J23	SIGNAL	WIRE COLOR	DESTINATION
1	+20 V UNREG	8-N (2)	J50-4
2	GND	8-N (0)	J50-3
3	GND	8-N Shield	Open
4			
5			
6			
7	+12 V DECOUPLED	2-1	J40-1
8	−12 V DECOUPLED	7-0	J40-6

J24	SIGNAL	WIRE COLOR	DESTINATION
1	+185 V	2-69	J51-2
2			
3	+320 V	2-59	J51-1
4			
5	+20 V UNREG	2-49	J54-6
6	F.G. HEATER	1-N	J54-5
7	GND	0-N	J54-7
8	−20 V UNREG	7-19	J54-8

KEYBOARD

J30	SIGNAL	WIRE COLOR	DESTINATION
1	KC0-1	9-1	J3-28
2	KC1-1	9-2	J3-27
3	KC2-1	9-3	J3-26
4	KC3-1	9-4	J3-25
5	KC4-1	9-5	J3-24
6	KC5-1	9-6	J3-23
7	KC6-1	9-7	J3-22
8	TTY-0	9-8	J3-21

KEYBOARD (cont)

J31	SIGNAL	WIRE COLOR	DESTINATION
1	KEY-1	9-1	J3-8
2	KBHALT-1	9-2	J3-7
3	SHIFT-0	9-3	J3-6
4	CTRL-0	9-4	J3-5
5	GND	9-5	J3-4
6	KBCLK-0	9-6	J3-3
7	+5 V	9-7	J3-2

JOYSTICK CONNECTOR

J40	SIGNAL	WIRE COLOR	DESTINATION
1	+12 V	2-1	J23-7
2	(SELECT)		(Not used)
3	X JOY	8-5 (2)	J4-8
4	X JOY GND	8-5 (0)	J4-7 Shield to solder lug
5	GND	N	Solder lug
6	−12 V	7-0	J23-8
7			
8	Y JOY	8-6 (2)	J4-6
9	Y JOY GND	8-6 (0)	J4-5 Shield to solder lug

DISPLAY BOARD

J50	SIGNAL	WIRE COLOR	DESTINATION
1	GND	EMPTY	4006 only
2	GND	EMPTY	4006 only
3	GND	8-N (0)	J23-2
4	+20 V UNREG	8-N (2)	J23-1

DISPLAY BOARD (cont)

J51	SIGNAL	WIRE COLOR	DESTINATION
1	+320 V	2-69	J24-3
2	+185 V	2-59	J24-1

J52	SIGNAL	WIRE COLOR	DESTINATION
1	H.C. POT 1	9-6	H.C. POT (R1050)
2	H.C. POT 2	9-8	H.C. POT (R1050)
3	MAKE COPY-0	9-04	J41-11
4	WAIT-0	9-05	J41-14
5	INTER-0	9-7 Coax	J41-5
6	INTER GND	9-7 Shield	J41—Chassis Gnd
7	TARSIG-0	9-8	J41-7
8	TARSIG GND	9-8 Shield	J41—Chassis Gnd
9	READ-0	9-7	J41-9

J53	SIGNAL	WIRE COLOR	DESTINATION
1	KBCOPY-0	EMPTY	(UNUSED)
2	COPY-0	9-4	J4-23
3	Z GND	9-N Shield	J4-17
4	Z-0	9-N Coax	J4-16
5	VIEW-1	9-1	J4-11
6	ERASE-0	9-3	J4-9
7	DRBUSY	9-2	J4-10

DISPLAY BOARD (cont)

J54	SIGNAL	WIRE COLOR	DESTINATION
1		EMPTY	4006 only
2	GND	0-N	J4-20
3	−12 V	7-0	J4-19
4	+15 V	2-3	J4-22
5	F.G. HEATER	1-N	J24-6
6	+20 V UNREG	2-49	J24-5
7	GND	0-N	J24-7
8	−20 V UNREG	7-19	J24-8
9	+5 V	2-0	J4-21

J55	SIGNAL	WIRE COLOR	DESTINATION
1	Y	9-1 Coax	J4-14
2	Y GND	9-1 Shield	J4-15
3	X GND	9-2 Shield	J4-3
4	X	9-2 Coax	J4-2

J56	SIGNAL	WIRE COLOR	DESTINATION
1	X RAMP RET	8-N (0)	J41-4
2	X HC RAMP IN	8-N (2)	J41-3
3	Y HC RAMP IN	8-2 (2)	J41-1
4	Y RAMP RET	8-2 (0)	J41-2

J57	SIGNAL	WIRE COLOR	DESTINATION
1	Y DFL COIL	0-N	To crt deflection coils
2	X DFL COIL	6-N	
3	X DFL COIL	2-N	
4	Y DFL COIL	4-N	

DISPLAY BOARD (cont)

J58	SIGNAL	WIRE COLOR	DEFLECTION
1	−20 V UNREG	9-1	To crt storage and collomination electrodes
2	F.G. HEATER	9-2	
3	CE1	9-3	
4	STB	9-4	
5	CE2	9-5	
6	ANODE	9-6	
7			
8	CATHODE	9-7	

J59	SIGNAL	WIRE COLOR	DESTINATION
1	COPYEN-1	9-5	J4-4

INDICATOR LIGHTS

J60	SIGNAL	WIRE COLOR	DESTINATION
1	+12 V	2-1	J3-9
2	I/O-0	1-3	J3-29
3	BREAK-0	1-4	J3-10
4	BUSY-0	1-5	J3-32
5	SPEAKER	1-6	J3-12
6	GND	0-N	J3-30

J61	SIGNAL	WIRE COLOR	DESTINATION
1	SPEAKER		speaker
2	BUSY-0		speaker

TAPE DRIVE BOARD

J81	SIGNAL	WIRE COLOR	DESTINATION
1	RESTART-0		J2-1
2	GND		J2-2
3	GND		J2-3
4	GND		J2-4
5	GND		J2-5
6	GND		J2-6
7	GND		J2-7
8	GND		J2-8
9	GND		J2-9
10	GND		J2-10
11	GND		J2-11
12	GND		J2-12
13	GND		J2-13
14	−12 V		J2-14
15	+5 V		J2-15
16	+5 V		J2-16
17	+5 V		J2-17
18	+15 V		J2-18
19	LOADED-1		J2-19
20	RCLK-1		J2-20
21	WCLK-0		J2-21
22	MRDATA-1		J2-22
23	TUTS-1		J2-23
24	WDATA-1		J2-24
25	TNIM-1		J2-25
26	DELAY OUT-1		J2-26
27	SAFE-1		J2-27
28	LOHOLE-1		J2-28
29	WR-0		J2-29
30	UPHOLE-1		J2-30
31	FAST-1		J2-31
32	REV-1		J2-32
33	DRTAPE-0		J2-33
34	DELAY IN-0		J2-34

TAPE DRIVE BOARD (cont)

J82	SIGNAL	WIRE COLOR	DESTINATION
1	+20 V UNREG	2-49	J22-2
2	−20 V UNREG	7-19	J22-4
3	Motor GND Common	0-N	J22-3

J83	SIGNAL	WIRE COLOR	DESTINATION
1	+20 V	9-3	Emitter of Q1091
2	Motor Drive	9-4	Collector of Q1091
3	Positive Control	9-5	Base of Q1091

J84	SIGNAL	WIRE COLOR	DESTINATION
1	TAC		Tape drive tachometer
	POSITIVE OUTPUT		
2	TAC GROUND		

J85	SIGNAL	WIRE COLOR	DESTINATION
1	Motor Drive		Tape drive motor
2	Motor Common		
3	Motor Shield		

TAPE DRIVE BOARD (cont)

J86	SIGNAL	WIRE COLOR	DESTINATION
1	−20 V	9-0	Emitter of Q1092
2	Motor Drive	9-1	Collector of Q1092
3	Negative Control	9-2	Base of Q1092

J87	SIGNAL	WIRE COLOR	DESTINATION
1	LOADED-1	9-1	J361-1
2	SAFE SW	9-2	J361-2
3	+15 V1	9-3	J361-3
4	+5 V	9-4	J361-4
5	GND	9-5	J361-5
6	UPHOLE	9-6	J361-6
7	LOHOLE	9-7	J361-7
8	LAMP ON	9-8	J360-1
9	LAMP ON RETURN	9-N	J360-2

J88	SIGNAL	WIRE COLOR	DESTINATION
1	Pickup Coil		coil
2	Pickup Coil		coil
3	Shield		case

J89	SIGNAL	WIRE COLOR	DESTINATION
1	Pickup Coil		coil
2	Pickup Coil		coil
3	Shield		case

BACKPACK BOARD (Firmware Or Communications)

P5-A	SIGNAL	WIRE COLOR	DESTINATION
A1	AB10-1		J5-A1
A2[1]	ROMDIS-1		J5-A2
A3[1]	HALT-0		J5-A3
A4[1]	PIAS-0		J5-A4
A5	RWOC-1		J5-A5
A6	AB12-1		J5-A6
A7	AB14-1		J5-A7
A8	AB0-1		J5-A8
A9	AB1-1		J5-A9
A10	AB2-1		J5-A10
A11	AB3-1		J5-A11
A12	−12 V		J5-A12
A13	−12 V		J5-A13
A14	RBC-1		J5-A14
A15	DB1-1		J5-A15
A16	DB3-1		J5-A16
A17	IRQ-0		J5-A17
A18	DB6-1		J5-A18
A19	PIAE		J5-A19
A20[1]	MCP1-1		J5-A20
A21[1]	REFCLK0-0		J5-A21
A22[1]	REFCLK1-0		J5-A22
A23	MCP2-1		J5-A23
A24	EPIAS-0		J5-A24
A25	+12 V		J5-A25

[1]**For Processor Test Only**

BACKPACK BOARD (Firmware Or Communications) (cont)

P5-B	SIGNAL	WIRE COLOR	DESTINATION
B1	GND		J5-B1
B2	GND		J5-B2
B3	+5 V		J5-B3
B4	AB9-1		J5-B4
B5	AB8-1		J5-B5
B6	AB7-1		J5-B6
B7	AB13-1		J5-B7
B8	AB15-1		J5-B8
B9[2]	ABA-1		J5-B9
B10[2]			J5-B10
B11	AB6-1		J5-B11
B12	AB5-1		J5-B12
B13	AB4-1		J5-B13
B14	AB11-1		J5-B14
B15	DB0-1		J5-B15
B16	DB2-1		J5-B16
B17	DB4-1		J5-B17
B18	DB5-1		J5-B18
B19	DB7-1		J5-B19
B20	RESTART-0		J5-B20
B21[2]			J5-B21
B22[2]	REFCLK2-0		J5-B22
B23[2]	RDE-0		J5-B23
B24	+5 V		J5-B24
B25	GND		J5-B25

[2]**For Processor Test only.**

BACKPACK BOARD (Firmware Or Communications) (cont)

J91-A	SIGNAL	WIRE COLOR	DESTINATION
A1	GND		ROM PACK
A2	+5 V		
A3	−12 V		
A4	−12 V		
A5	AB9-1		
A6	PIAE-1		
A7	EPIAS-1		
A8	XPC3-0		
A9	LBS-0		
A10	XPC4-0		
A11	RESTART-0		
A12	XPC2-0		
A13	AB14-1		
A14	IRQ-0		
A15	AB15-1		
A16	AB13-1		
A17	AB12-1		
A18	AB11-1		
A19	RWOC-1		
A20	BSX(L)-0		
A21	MCP2-1		
A22	BS(L)-0		ROM PACK

J91-B	SIGNAL	WIRE COLOR	DESTINATION
B1	GND		ROM PACK
B2	+5 V		
B3	AB10-1		
B4	+12 V		
B5	+12 V		
B6	DB0-1		
B7	AB8-1		
B8	DB1-1		
B9	AB7-1		
B10	DB2-1		
B11	DB4-1		
B12	DB3-1		ROM PACK

BACKPACK BOARD (Firmware Or Communications) (cont)

J91-B	SIGNAL	WIRE COLOR	DESTINATION
B13	DB5-1		ROM PACK
B14	AB0-1		
B15	DB6-1		
B16	AB1-1		
B17	DB7-1		
B18	AB2-1		
B19	AB6-1		
B20	AB3-1		
B21	AB5-1		
B22	AB4-1		ROM PACK

J92-A	SIGNAL	WIRE COLOR	DESTINATION
A1	GND		ROM PACK
A2	+5 V		
A3	−12 V		
A4	−12 V		
A5	AB9-1		
A6	PIAE-1		
A7	EPIAS-0		
A8	XPC3-0		
A9	LBS-0		
A10	XPC4-0		
A11	RESTART-0		
A12	XPC2-0		
A13	AB14-1		
A14	IRQ-0		
A15	AB15-1		
A16	AB13-1		
A17	AB12-1		
A18	AB11-1		
A19	RWOC-1		
A20	BSX(R)-0		
A21	MCP2-1		
A22	BS(R)-0		ROM PACK

BACKPACK BOARD (Firmware Or Communications) (cont)

J92-B	SIGNAL	WIRE COLOR	DESTINATION
B1	GND		ROM PACK
B2	+5 V		
B3	AB10-1		
B4	+12 V		
B5	+12 V		
B6	DB0-1		
B7	AB8-1		
B8	DB1-1		
B9	AB7-1		
B10	DB2-1		
B11	DB4-1		
B12	DB3-1		
B13	DB5-1		
B14	AB0-1		
B15	DB6-1		
B16	AB1-1		
B17	DB7-1		
B18	AB2-1		
B19	AB6-1		
B20	AB3-1		
B21	AB5-1		
B22	AB4-1		ROM PACK

COMMUNICATIONS I/F BOARD

J93	SIGNAL	WIRE COLOR	DESTINATION
1	GND		RS-232
2	TDATA		
3	RDATA		
4	RTS		
5	CTS		
6	DSR		
7	GND		
8	DCD		
9			
10			
11	STXA		
12	SRX		
13			
14			
15			
16			
17			
18			
19	STXC		
20	DTR		
21			
22			
23			
24			
25			RS-232

COMMUNICATIONS I/F BOARD (cont)

J94	SIGNAL	WIRE COLOR	DESTINATION
1	+5 V		J95-1
2	+12 V		J95-2
3	AB12-1		J95-3
4	AB15-1		J95-4
5	AB0-1		J95-5
6	DB1-1		J95-6
7	DB3-1		J95-7
8	DB5-1		J95-8
9	DB7-1		J95-9
10	AB14-1		J95-10
11	AB7-1		J95-11
12	AB8-1		J95-12
13	AB9-1		J95-13
14	AB10-1		J95-14
15	GND		J95-15
16	GND		J95-16
17	GND		J95-17
18	+5 V		J95-18
19	+12 V		J95-19
20	AB13-1		J95-20
21	AB1-1		J95-21
22	DB0-1		J95-22
23	DB2-1		J95-23
24	DB4-1		J95-24
25	DB6-1		J95-25
26	AB11-1		J95-26
27	AB6-1		J95-27
28	BSOFL-0		J95-28
29	BSCOM-0		J95-29
30	−5 V		J95-30
31	AB2-1		J95-31
32	AB3-1		J95-32
33	AB4-1		J95-33
34	AB5-1		J95-34

COMMUNICATIONS I/F BOARD (cont)

J95	SIGNAL	WIRE COLOR	DESTINATION
1	+5 V		J94-1
2	+12 V		J94-2
3	AB12-1		J94-3
4	AB15-1		J94-4
5	AB0-1		J94-5
6	DB1-1		J94-6
7	DB3-1		J94-7
8	DB5-1		J94-8
9	DB7-1		J94-9
10	AB14-1		J94-10
11	AB7-1		J94-11
12	AB8-1		J94-12
13	AB9-1		J94-13
14	AB10-1		J94-14
15	GND		J94-15
16	GND		J94-16
17	GND		J94-17
18	+5 V		J94-18
19	+12 V		J94-19
20	AB13-1		J94-20
21	AB1-1		J94-21
22	DB0-1		J94-22
23	DB2-1		J94-23
24	DB4-1		J94-24
25	DB6-1		J94-25
26	AB11-1		J94-26
27	AB6-1		J94-27
28	BSOFL-0		J94-28
29	BSCOM-0		J94-29
30	−5 V		J94-30
31	AB2-1		J94-31
32	AB3-1		J94-32
33	AB4-1		J94-33
34	AB5-1		J94-34

TAPE STATUS BOARD

J360	SIGNAL	WIRE COLOR	DESTINATION
1	LAMP ON	9-8	J87-8
2	LAMP ON RETURN	9-N	J87-9

J361	SIGNAL	WIRE COLOR	DESTINATION
1	LOADED-1	9-1	J87-1
2	SAFE SW	9-2	J87-2
3	+15 V1	9-3	J87-3
4	+5 V	9-4	J87-4
5	GND	9-5	J87-5
6	UPHOLE	9-6	J87-6
7	LOHOLE	9-7	J87-7

Section 4

4051 SCHEMATICS

Symbols and Reference Designators

Electrical components shown on the diagrams are in the following units unless noted otherwise:

Capacitors = Values one or greater are in picofarads (pF). Values less than one are in microfarads (μF).

Resistors = Ohms (Ω).

Graphic symbols and class designation letters are based on ANSI Standard Y32.2-1975.

Logic symbology is based on ANSI Y32.14-1973 in terms of positive logic. Logic symbols depict the logic function performed and may differ from the manufacturer's data.

Abbreviations are based on ANSI Y1.1-1972.

Other ANSI standards that are used in the preparation of diagrams by Tektronix, Inc. are:

Y14.15, 1966	Drafting Practices.
Y14.2, 1973	Line Conventions and Lettering.
Y10.5, 1968	Letter Symbols for Quantities Used in Electrical Science and Electrical Engineering.

The following prefix letters are used as reference designators to identify components or assemblies on the diagrams.

A	Assembly, separable or repairable (circuit board, etc)
AT	Attenuator, fixed or variable
B	Motor
BT	Battery
C	Capacitor, fixed or variable
CB	Circuit breaker
CR	Diode, signal or rectifier
DL	Delay line
DS	Indicating device (lamp)
E	Spark Gap, Ferrite bead
F	Fuse
FL	Filter
H	Heat dissipating device (heat sink, heat radiator, etc)
HR	Heater
HY	Hybrid circuit
J	Connector, stationary portion
K	Relay
L	Inductor, fixed or variable
M	Meter
P	Connector, movable portion
Q	Transistor or silicon-controlled rectifier
R	Resistor, fixed or variable
RT	Thermistor
S	Switch or contactor
T	Transformer
TC	Thermocouple
TP	Test point
U	Assembly, inseparable or non-repairable (integrated circuit, etc.)
V	Electron tube
VR	Voltage regulator (zener diode, etc.)
W	Wirestrap or cable
Y	Crystal
Z	Phase shifter

The following special symbols may appear on the diagrams:

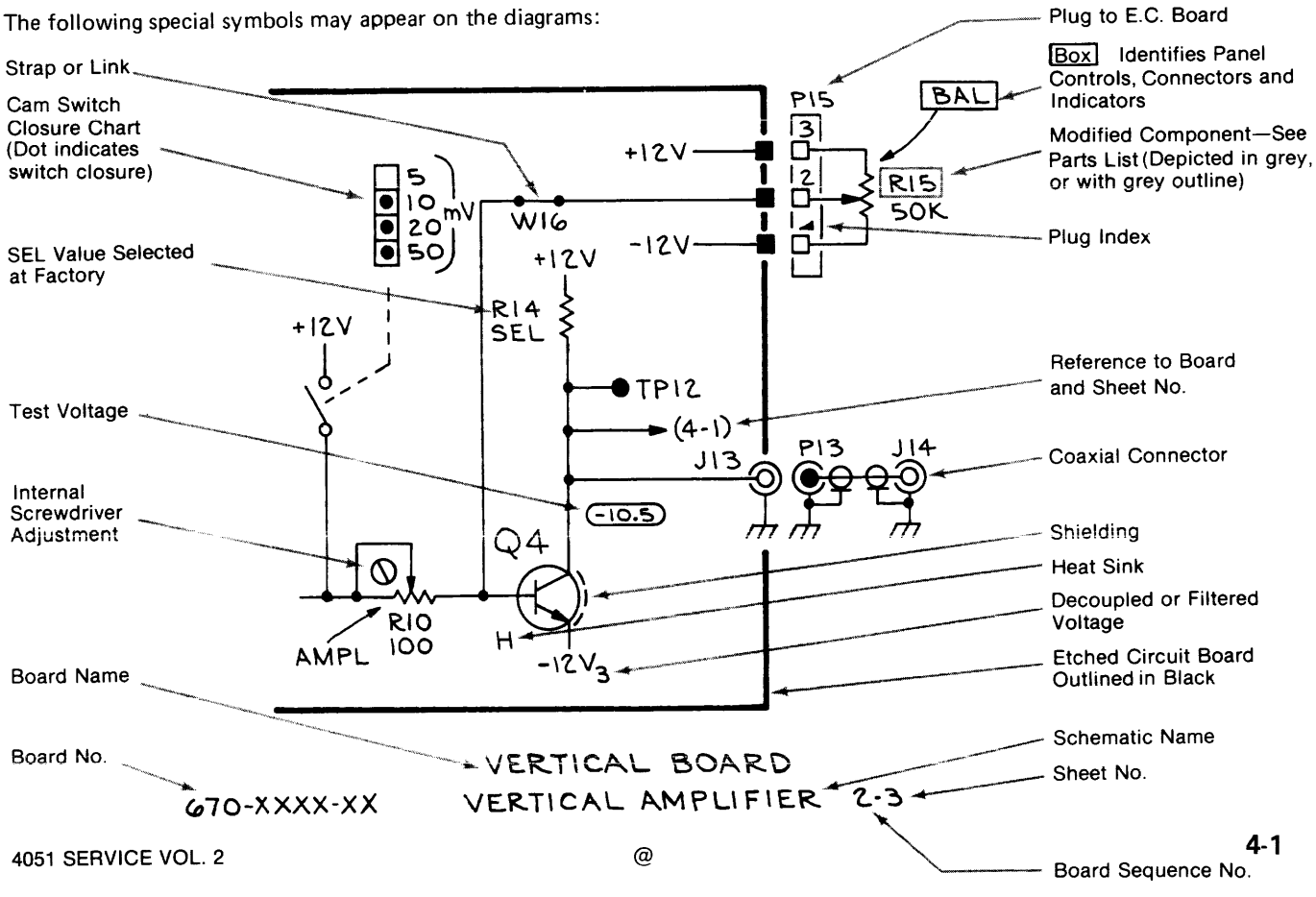

1. TRUE HIGH and TRUE LOW Signals

Signal names on the schematics are followed by −1 or −0. A TRUE HIGH signal is indicated by −1, and a TRUE LOW signal is indicated by −0.

SIGNAL−1 = TRUE HIGH
SIGNAL−0 = TRUE LOW

2. Cross-References

Schematic cross-references (from/to information) are included on the schematics. The "from" reference only indicates the signal "source," and the "to" reference lists all loads where the signal is used. All from/to information will be enclosed in parenthesis.

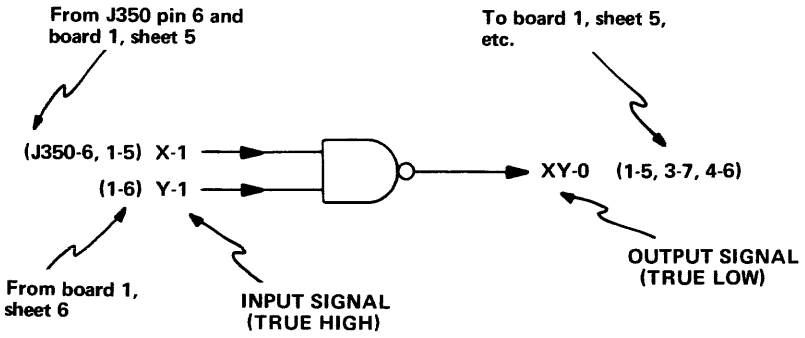

Board #	Name of Board	Schematic Section
1	Power Supply	4051 Schematics
2	CPU	
3	Memory	
4	Display	
5	Keyboard	
6	Tape Drive	
7	Tape Status	
8	Indicator Lights	
9	Firmware Backpack	Firmware Backpack
10	Communication Interface	Communication Backpack
11	Communication ROM	

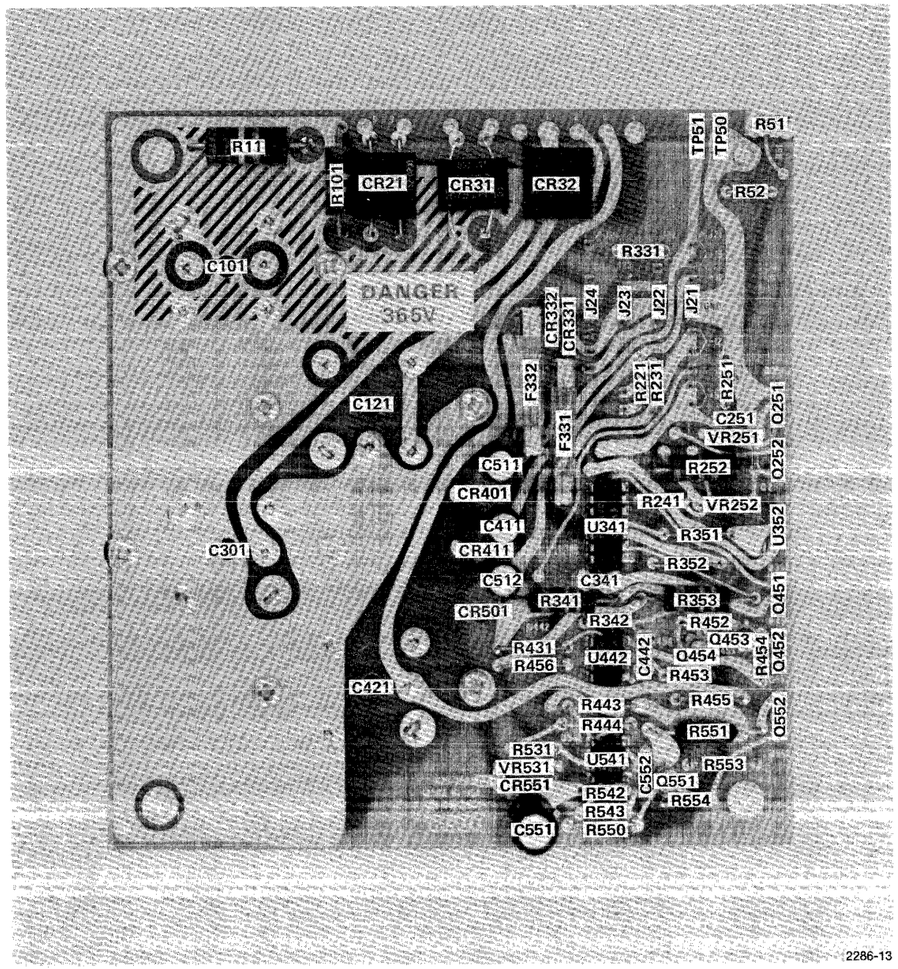

Power Supply board 670-4005-00.

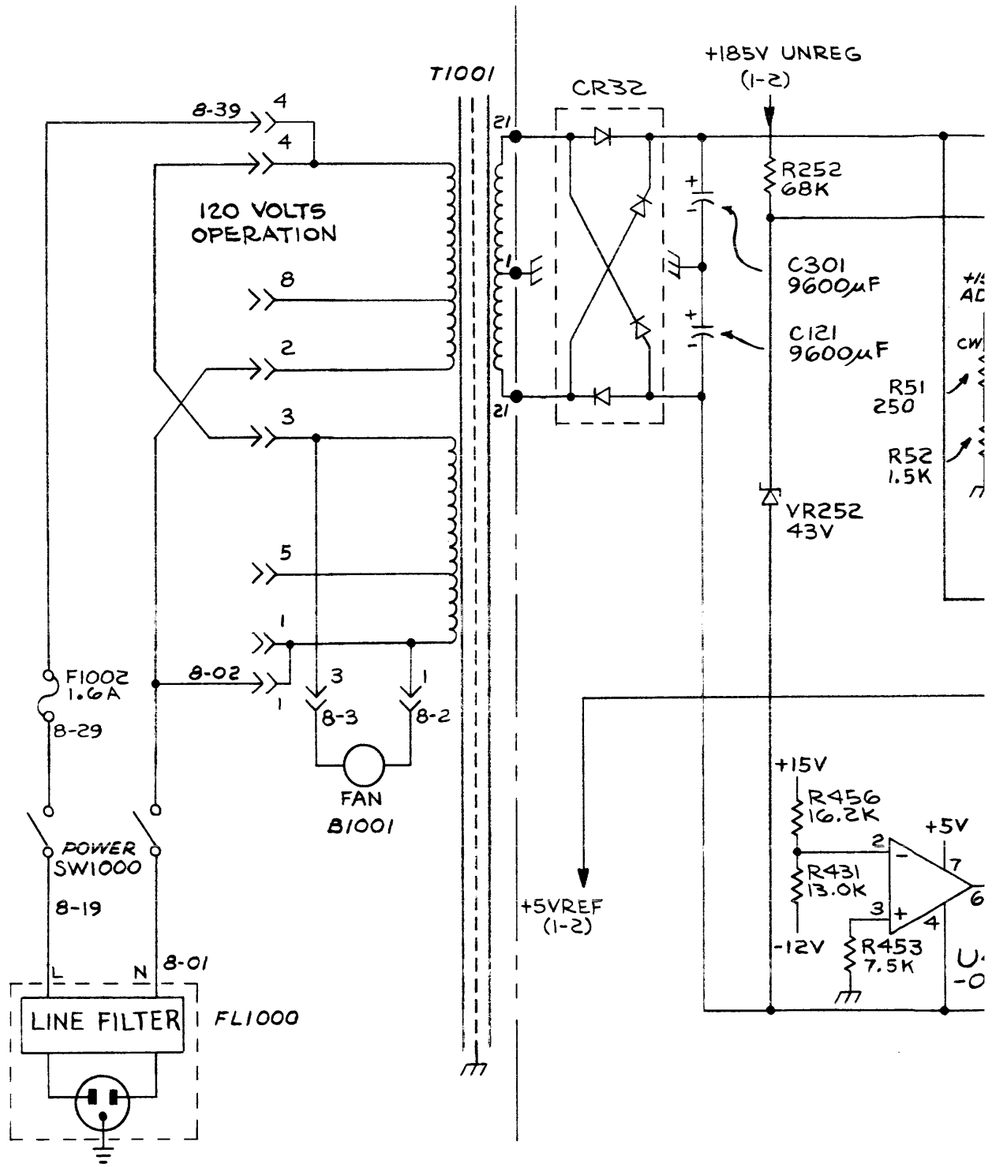

INSTRUMENT:	
4051	

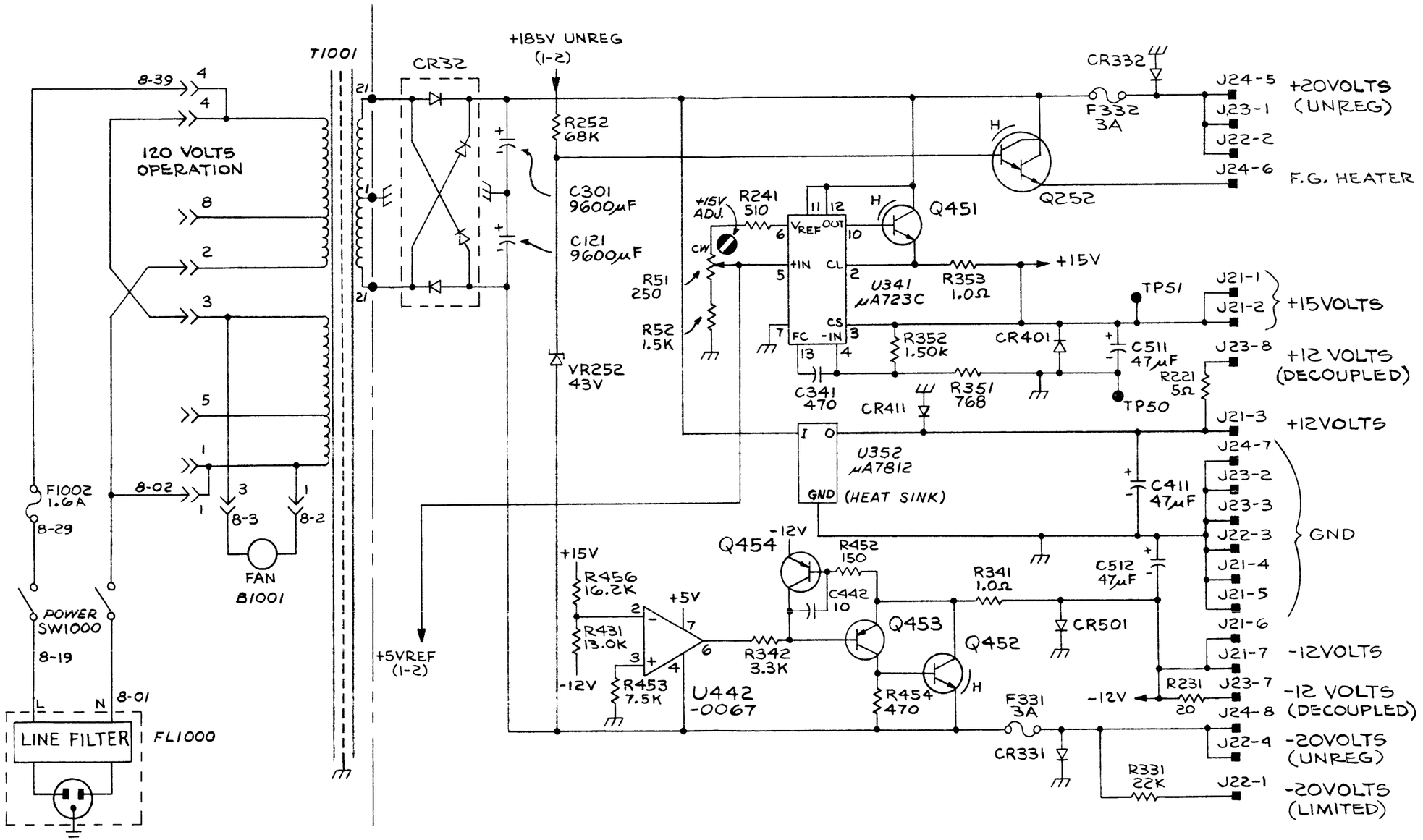

2286-13

INSTRUMENT: 4051	670-4005	BOARD: POWER SUPPLY	PAGE: 1-1
		DIAGRAM: NON-TTL SUPPLIES	

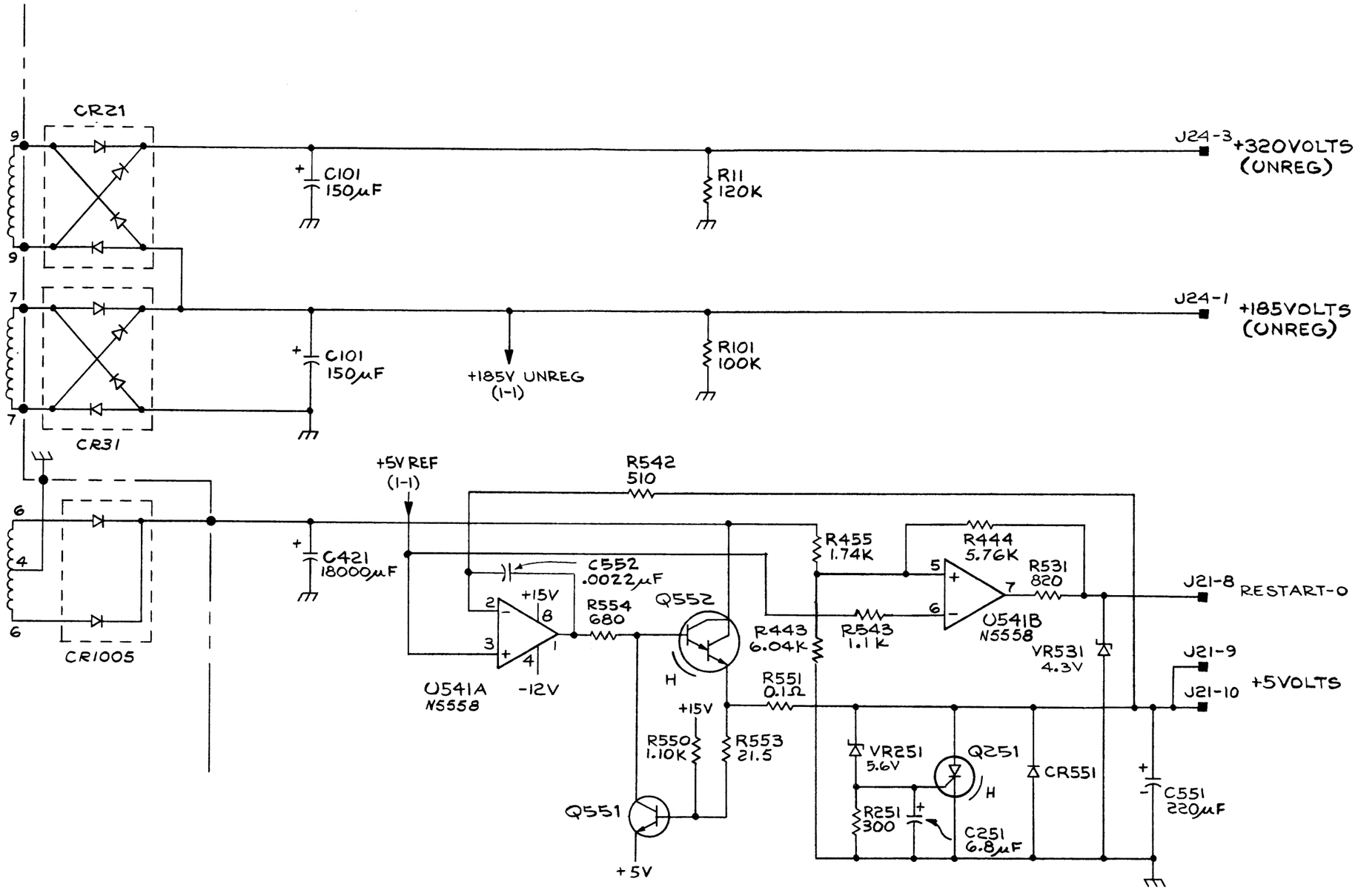

INSTRUMENT:		BOARD:	PAGE:
4051	670-4005	POWER SUPPLY	1-2
		DIAGRAM: TTL & COLLIMATION SUPPLIES	

@

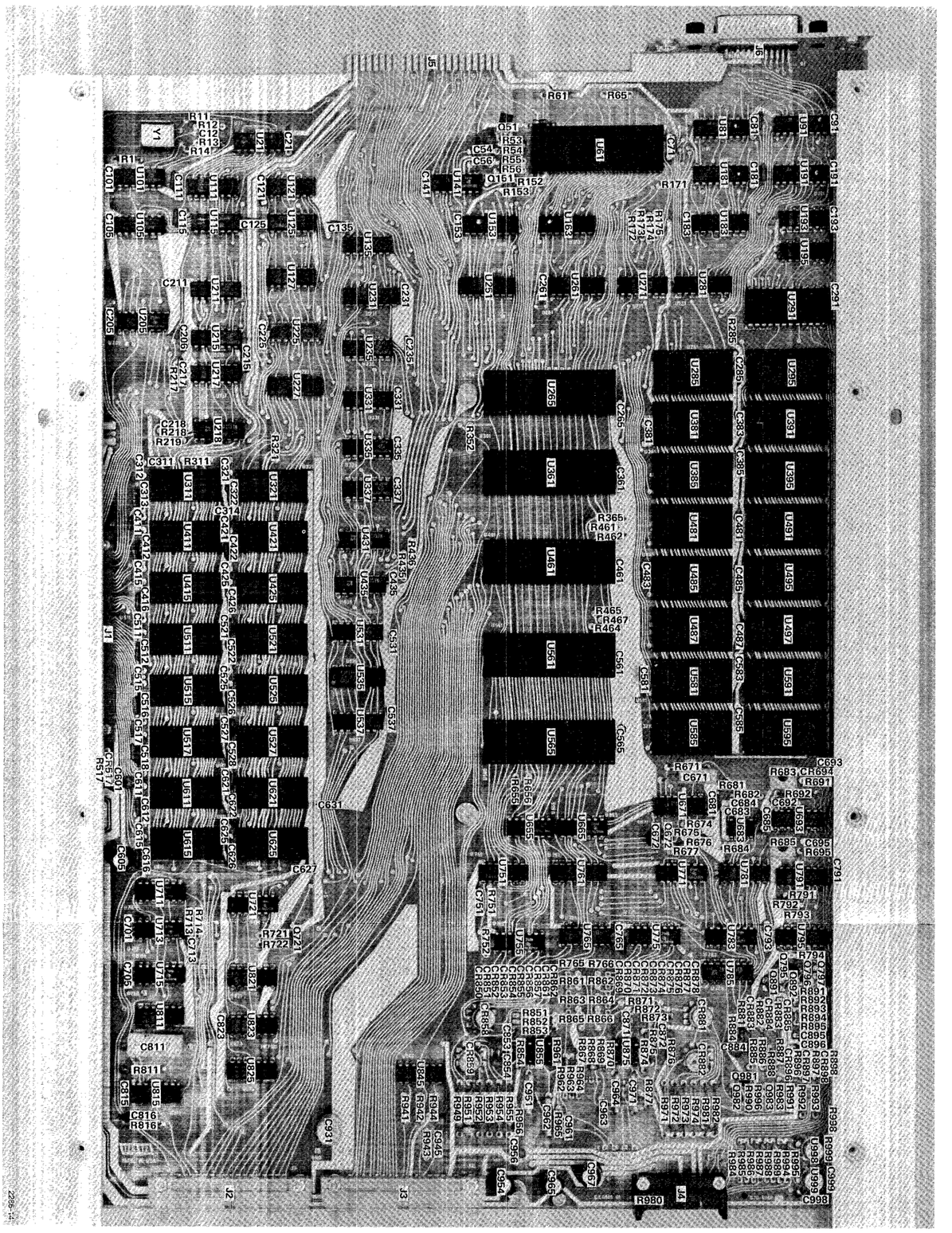

CPU board 670-4008-00.

INSTRUMENT: 4051

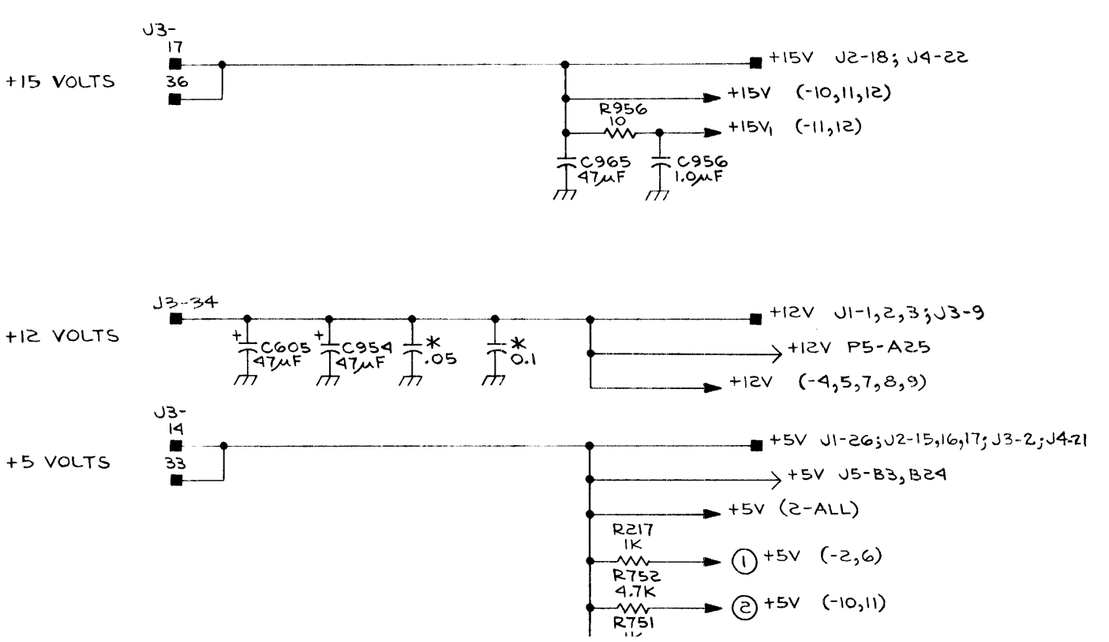

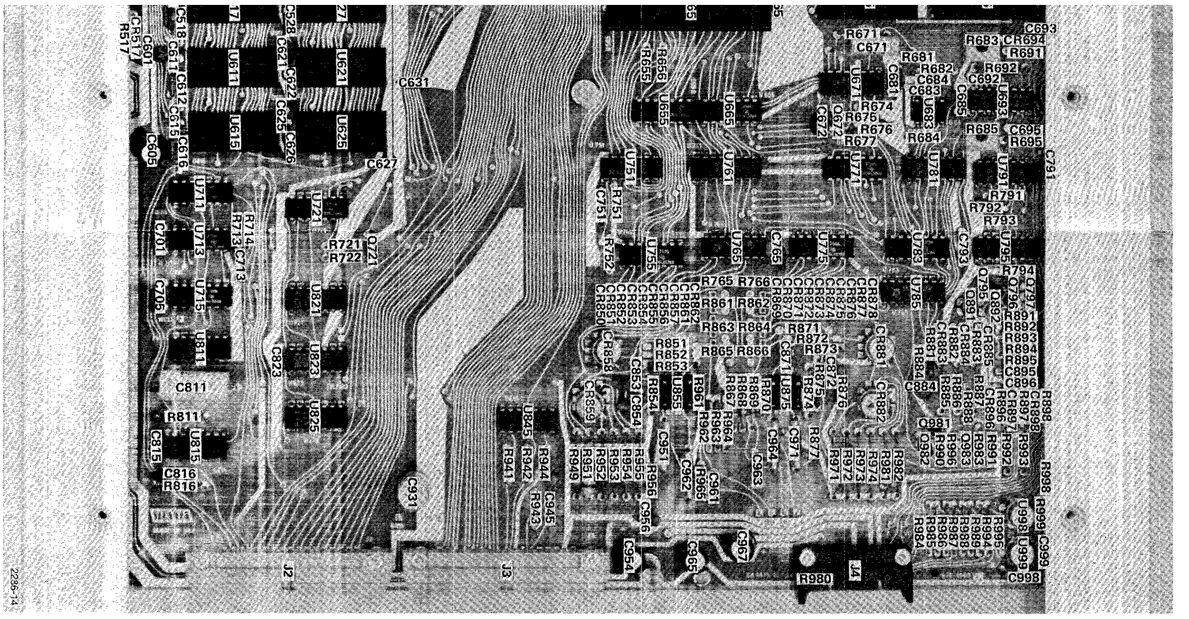

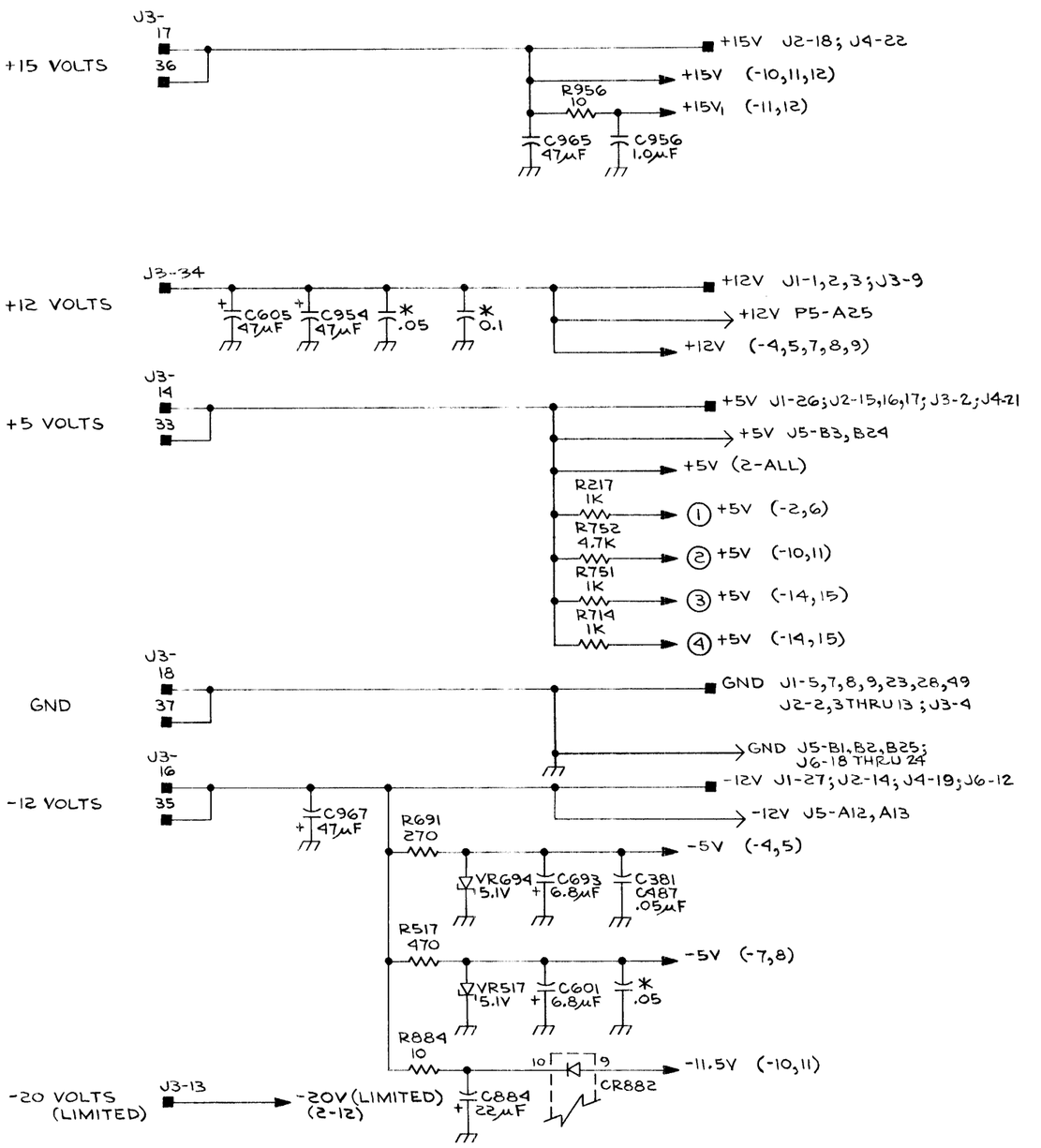

* REFER TO TABLE 12-1 AT THE FRONT OF THIS SECTION

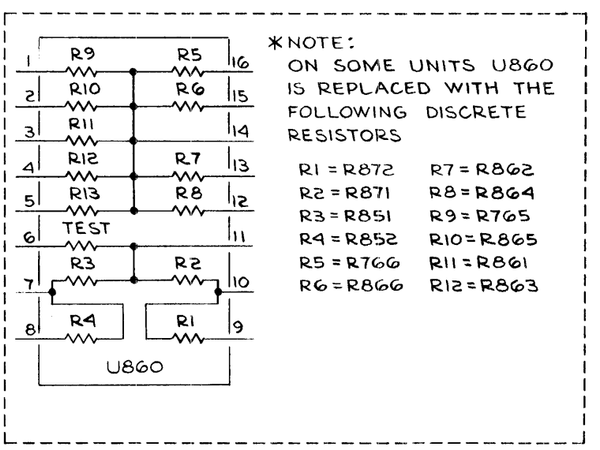

*NOTE:
ON SOME UNITS U860 IS REPLACED WITH THE FOLLOWING DISCRETE RESISTORS

R1 = R872	R7 = R862
R2 = R871	R8 = R864
R3 = R851	R9 = R765
R4 = R852	R10 = R865
R5 = R766	R11 = R861
R6 = R866	R12 = R863

INSTRUMENT: 4051

BOARD: CPU BOARD

DIAGRAM: POWER DISTRIBUTION

PAGE: 2-1

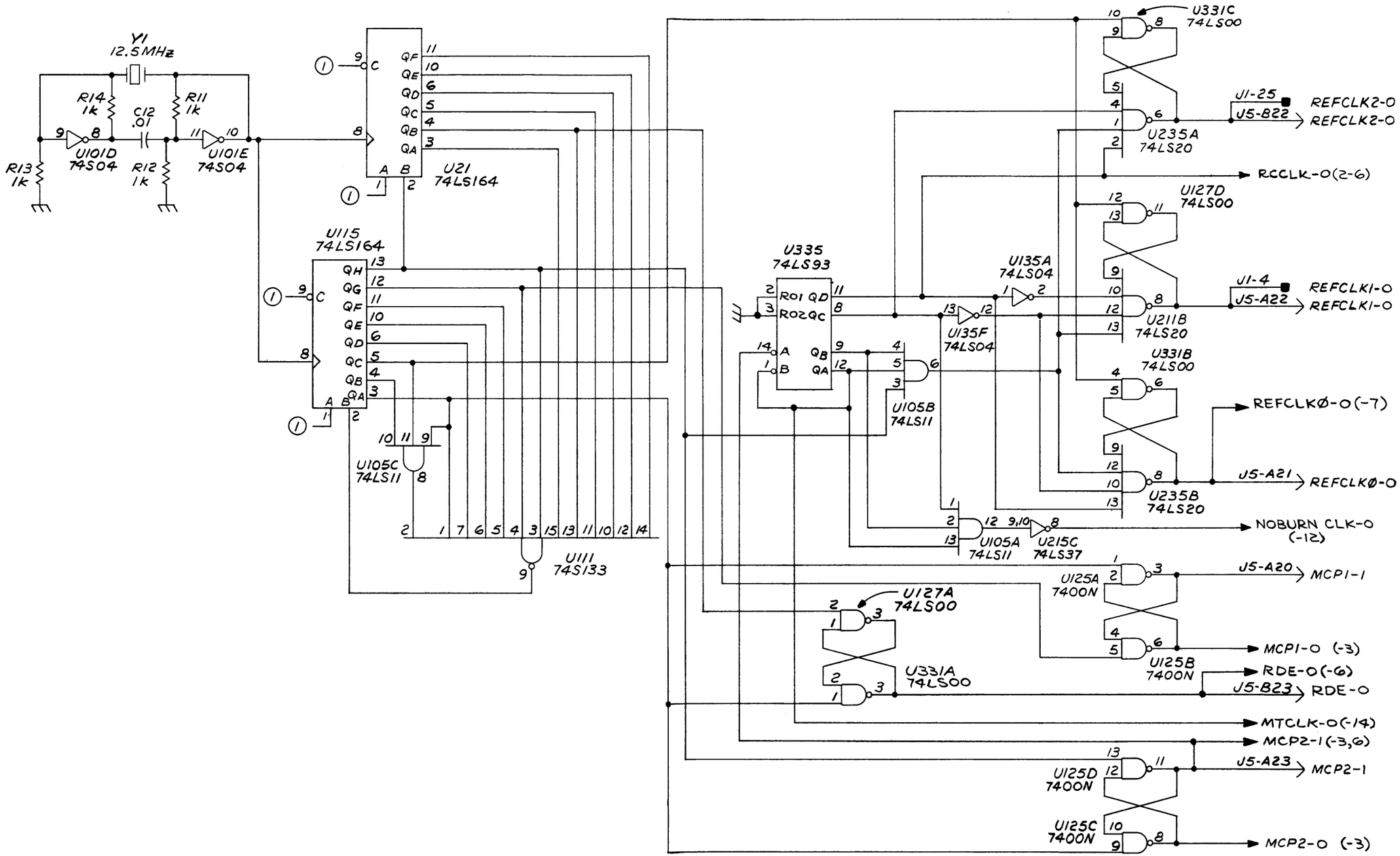

INSTRUMENT: 4051	670-4008-01	BOARD: CPU BOARD DIAGRAM: MASTER CLOCK GEN.	PAGE: 2-2

@

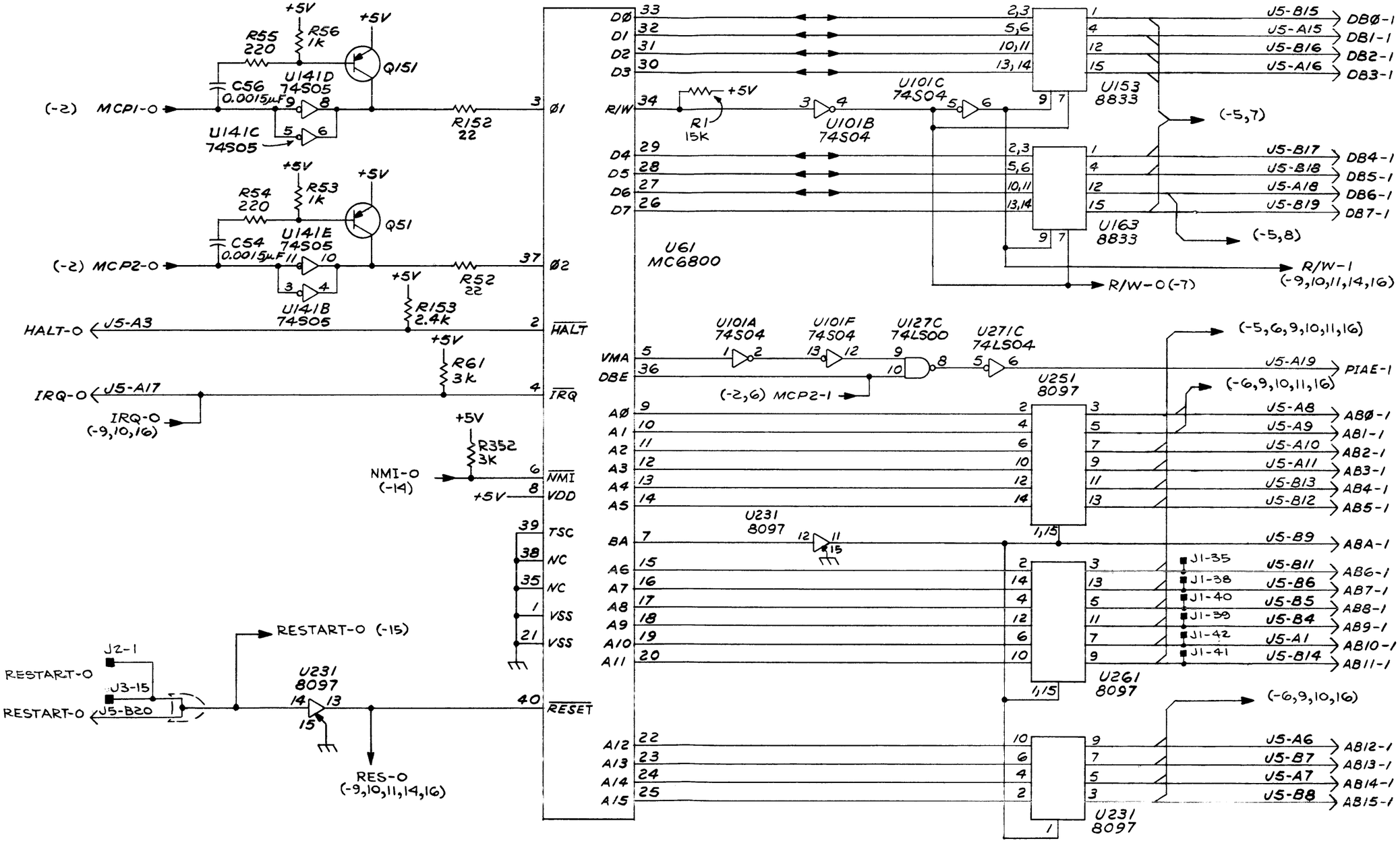

INSTRUMENT: 4051	670-4008-01	BOARD: CPU BOARD	PAGE: 2-3
		DIAGRAM: CENTRAL PROCESSING UNIT	

U585 MCM6832L
U581 MCM6832L
U487 MCM6832L
U485 MCM6832L
U481 MCM6832L
8K BANK
(-3)
AB10-1
AB9-1
AB8-1
AB7-1
AB6-1
AB5-1
AB4-1
AB3-1
AB2-1
AB1-1
AB0-1
A10 A9 A8 A7 A6 A5 A4 A3 A2 A1 A0
CE
O7 O6 O5 O4 O3 O2 O1 O0
DB7-1 DB6-1 DB5-1 DB4-1 DB3-1 DB2-1 DB1-1 DB0-1
VDD +12V
VCC +5V
VSS
VBB -5V
+5V
R171 2.4K
U271B 74LS04
U121B 74LS32
U195A 74LS32
U195D 74LS32
U195B 74LS32
U195C 74LS32
RBC-1
U5-A14
U211A 74LS20
U215D 74LS37
U121C 74LS32
U121D 74LS32
U5-A4
PIAS-0
IPIAS-0 (-9,10,11,14,16)
U135E 74LS04
U331D 74LS00
U5-A24
EPIAS-0
ROM ADDRESS DECODER
U291 74154
U271E 74LS04
R175 2.4K
R173 2.4K
R174 2.4K
R172 2.4K
ROME5-0
ROME6-0
ROME7-0
ROME8-0
ROME9-0
ROME10-0
ROME11-0
ROME12-0
ROME13-0
ROME14-0
ROME15-0 (-5)
U5-A2
ROMDIS-1
R65 560

INSTRUMENT: 4051	670-4008-01	BOARD: CPU BOARD	PAGE: 2-4
		DIAGRAM: ROM PAGE DECODER & 8K BANK	

@

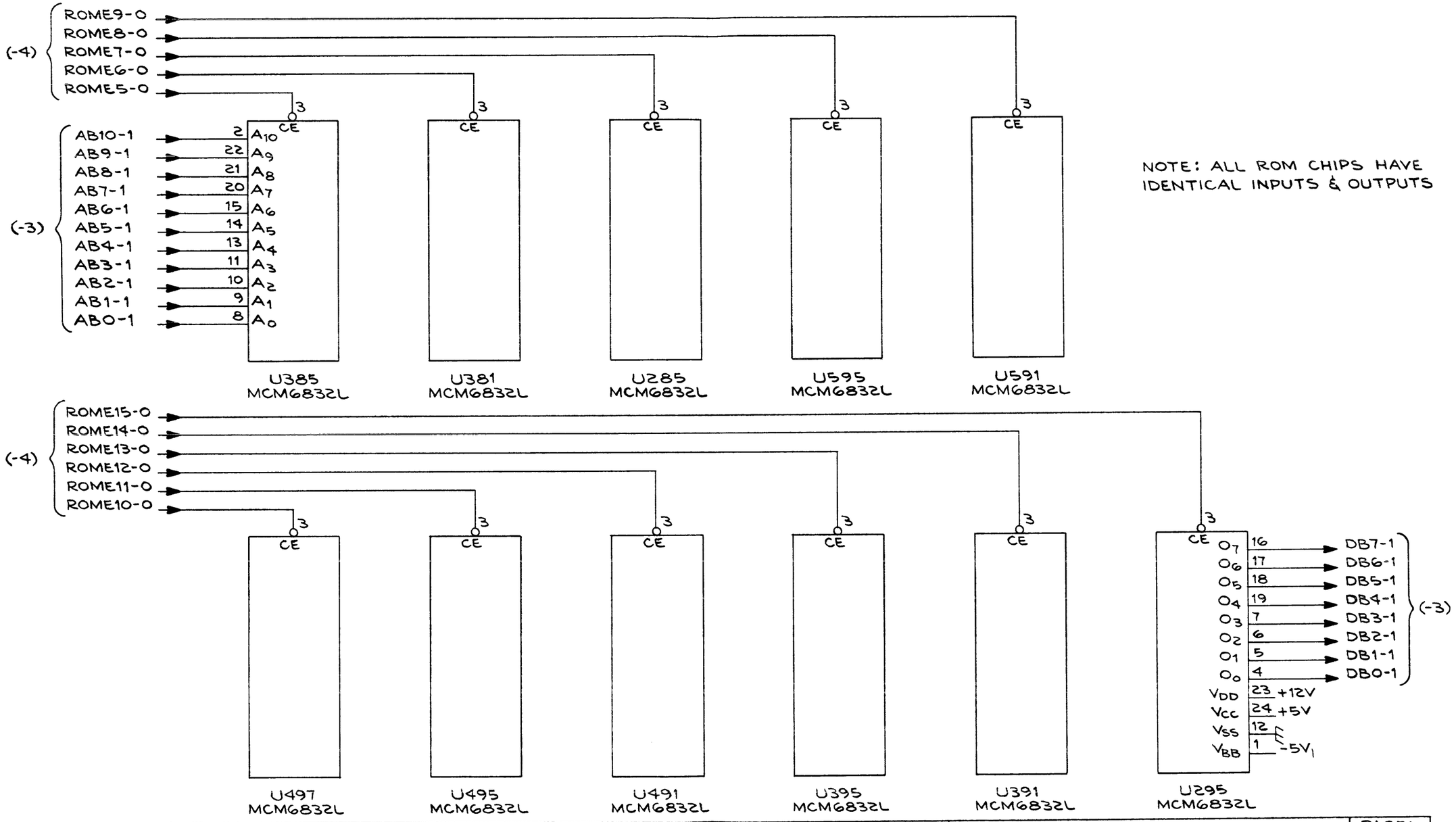

NOTE: ALL ROM CHIPS HAVE IDENTICAL INPUTS & OUTPUTS

INSTRUMENT: 4051	670-4008-01	BOARD: CPU BOARD	PAGE: 2-5
		DIAGRAM: 22K ROM	

@

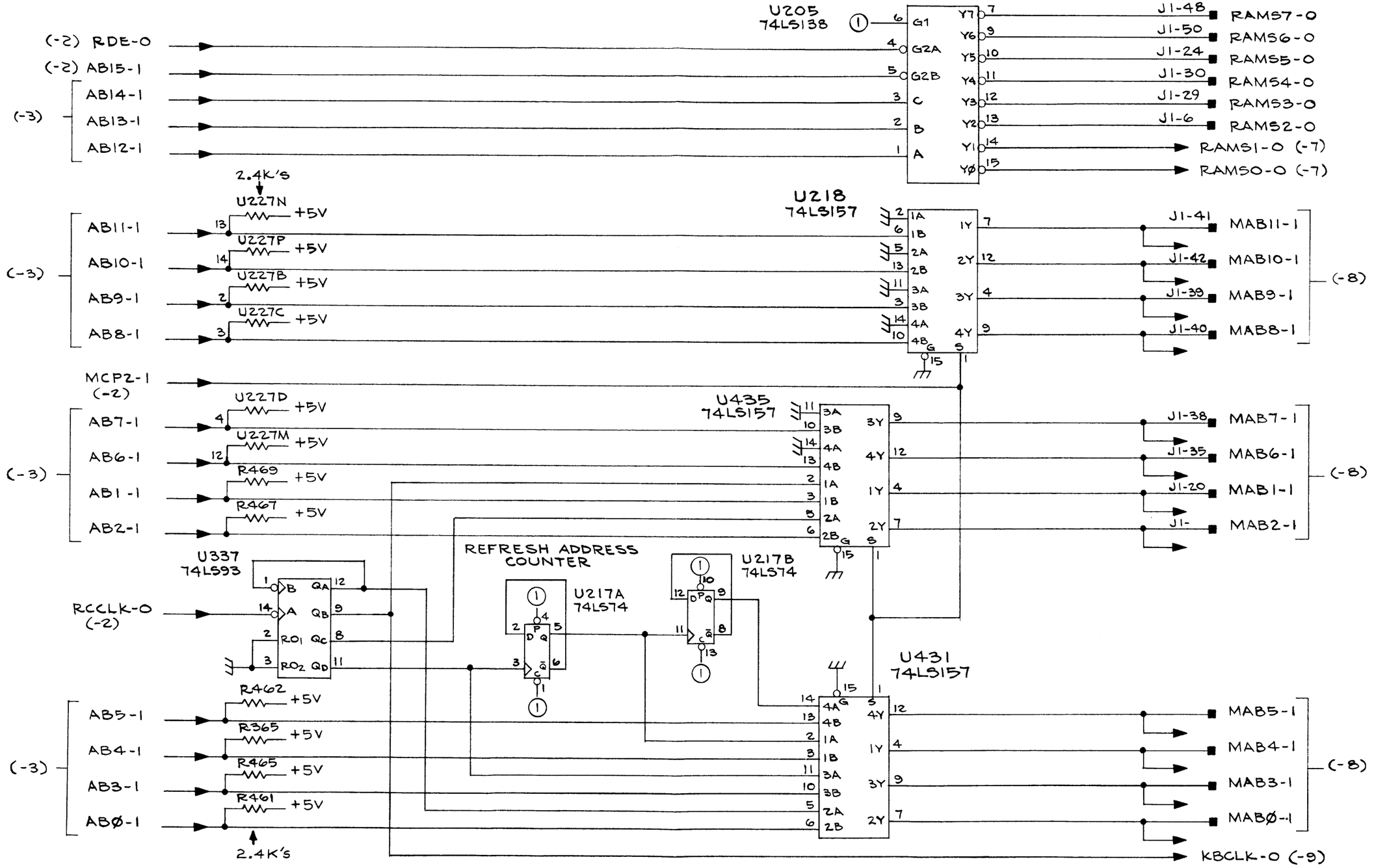

INSTRUMENT: 4051	670-4008-01	BOARD: CPU	PAGE: 2-6
		DIAGRAM: RAM REFRESH	

@

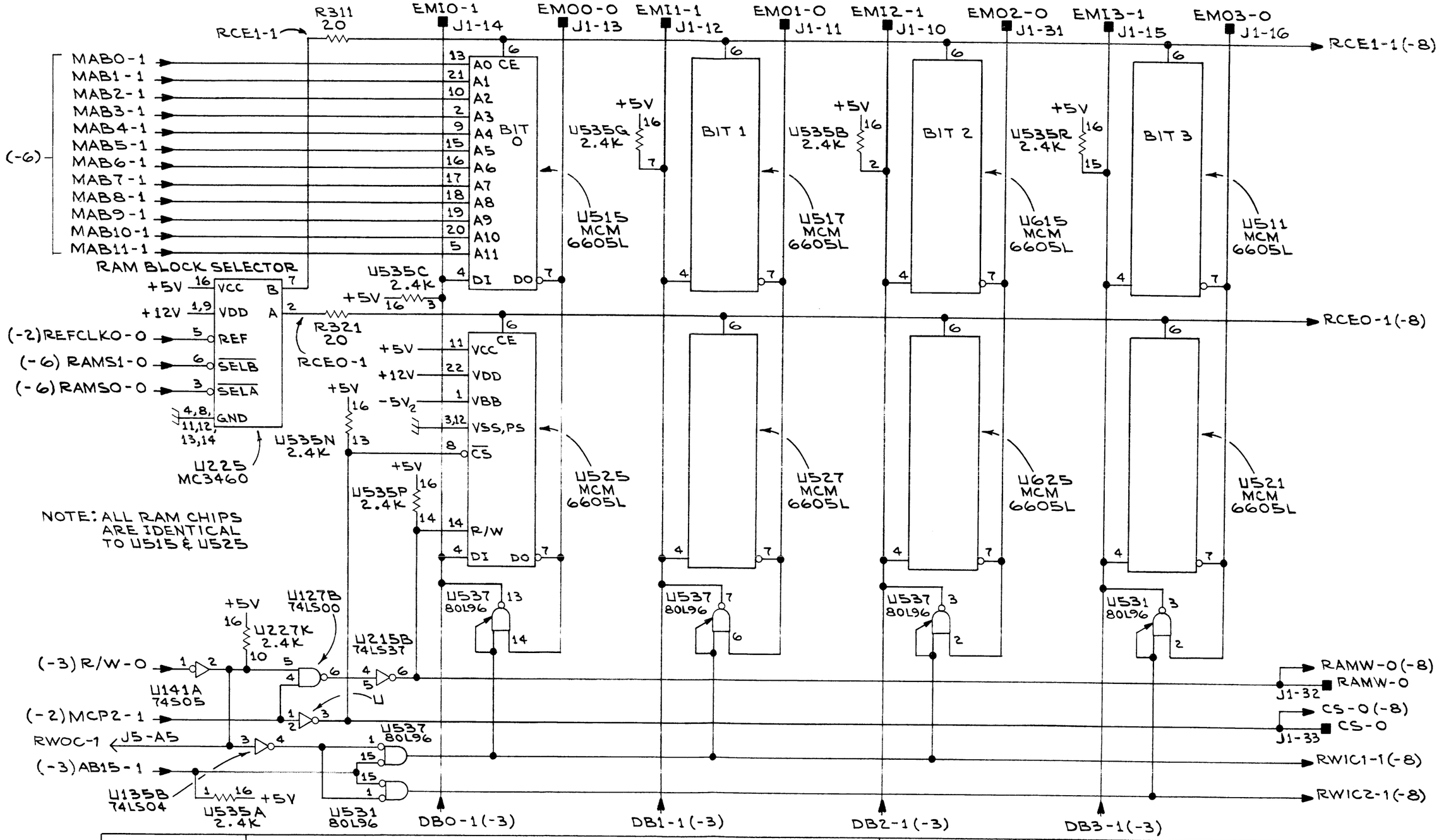

INSTRUMENT:		BOARD:	PAGE:
4051	670-4008-01	CPU BOARD	2-7
		DIAGRAM: STANDARD RAM	

@

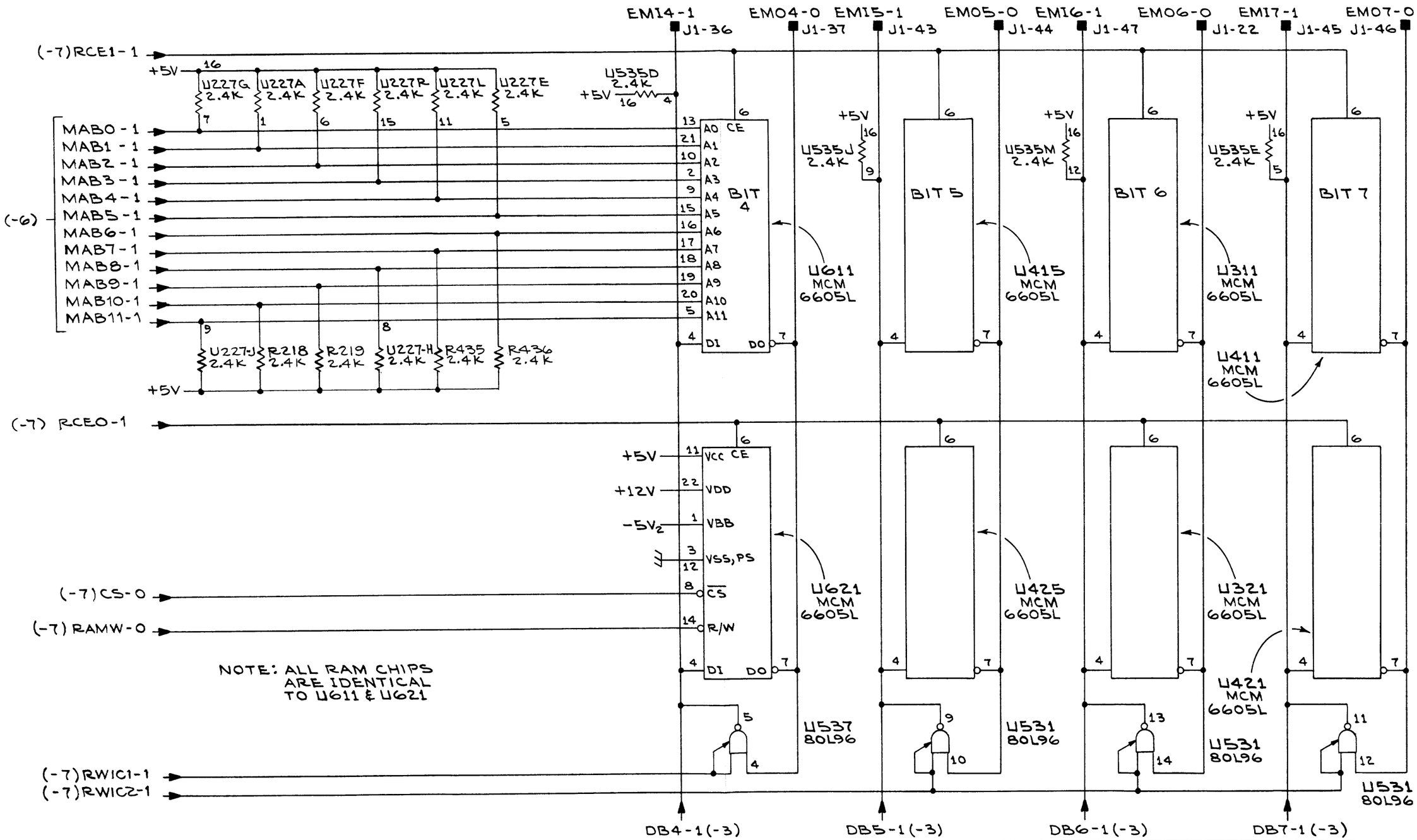

INSTRUMENT:		BOARD: CPU BOARD	PAGE:
4051	670-4008-01	DIAGRAM: STANDARD RAM	2-8

@

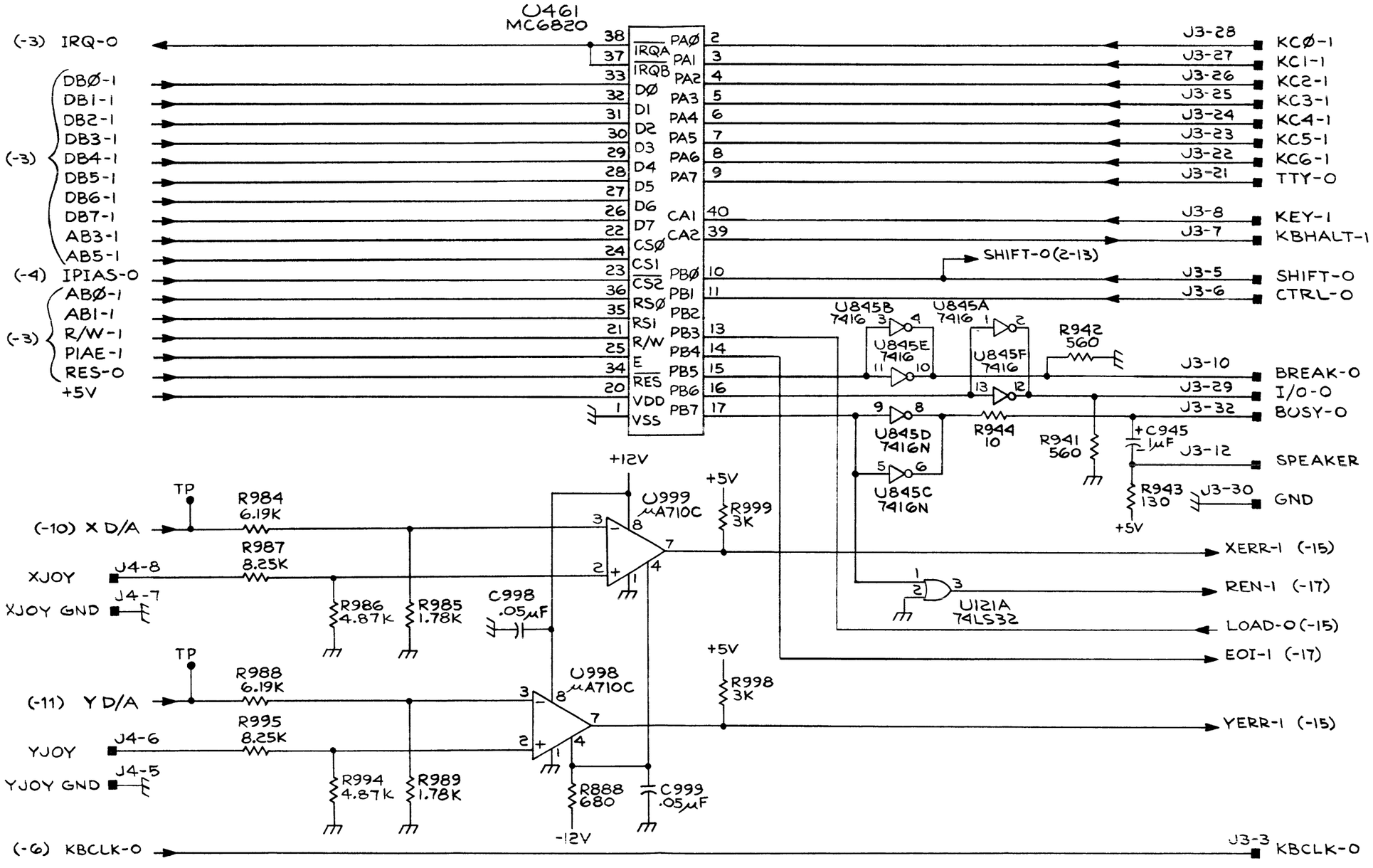

INSTRUMENT: 4051	670-4008-01	BOARD: CPU BOARD	PAGE: 2-9
		DIAGRAM: KEYBOARD/JOYSTICK INTERFACE	

@

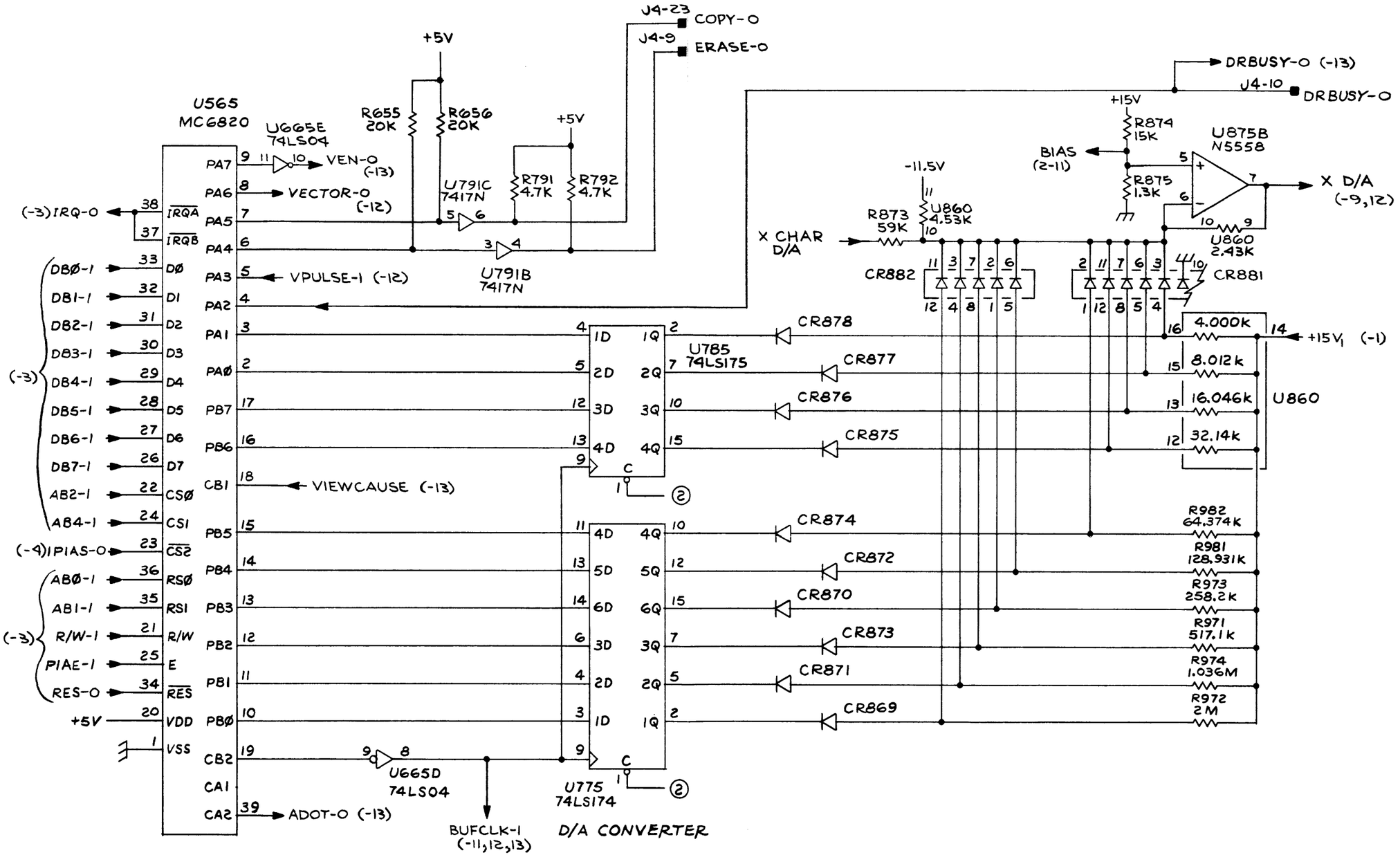

INSTRUMENT:		BOARD:	PAGE:
4051	670-4008-01	CPU BOARD	2-10
		DIAGRAM: DISPLAY X D TO A CONVERTER	

@

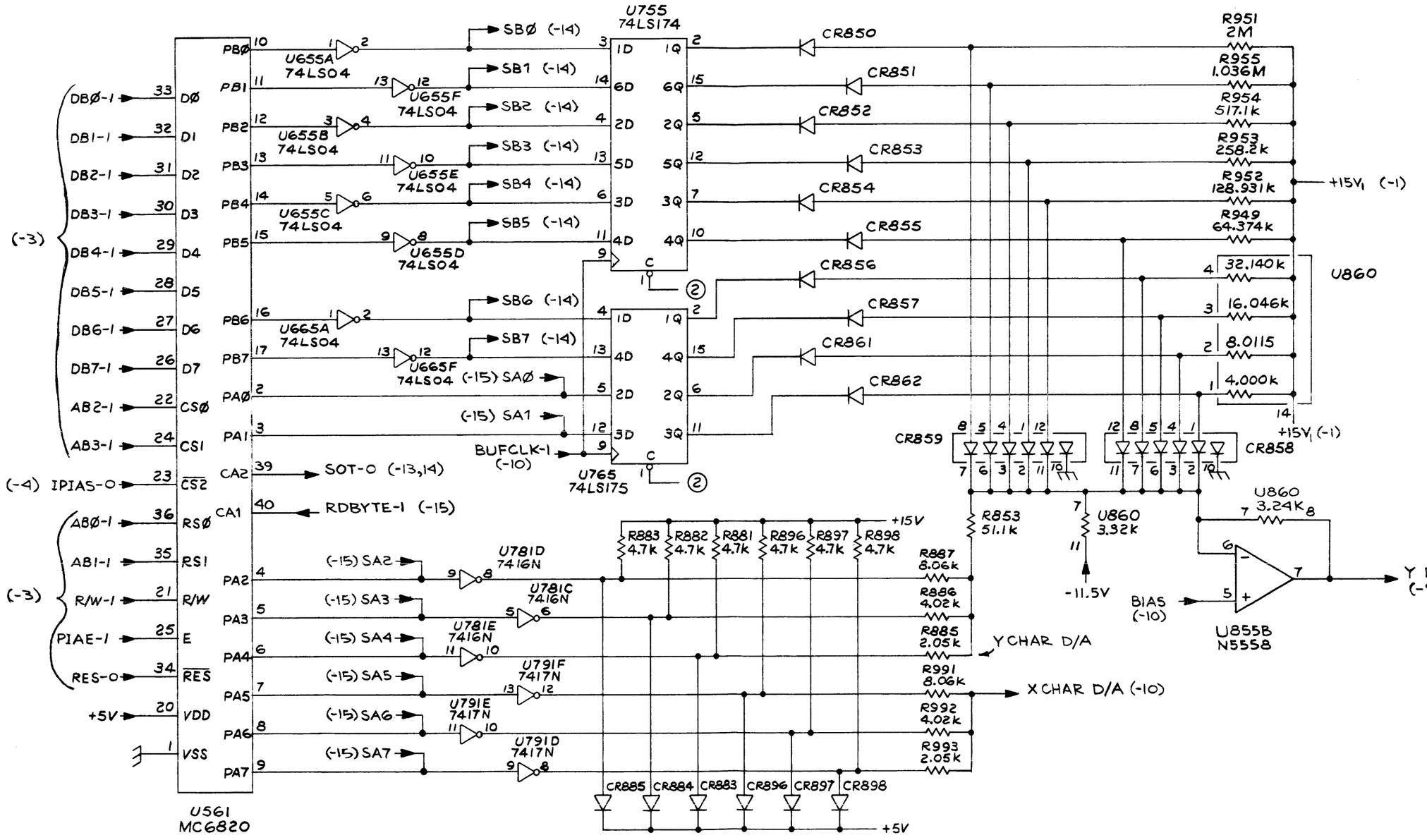

INSTRUMENT: 4051	670-4008-01	BOARD: CPU BOARD	PAGE: 2-11
		DIAGRAM: DISPLAY Y D TO A CONVERTER	

@

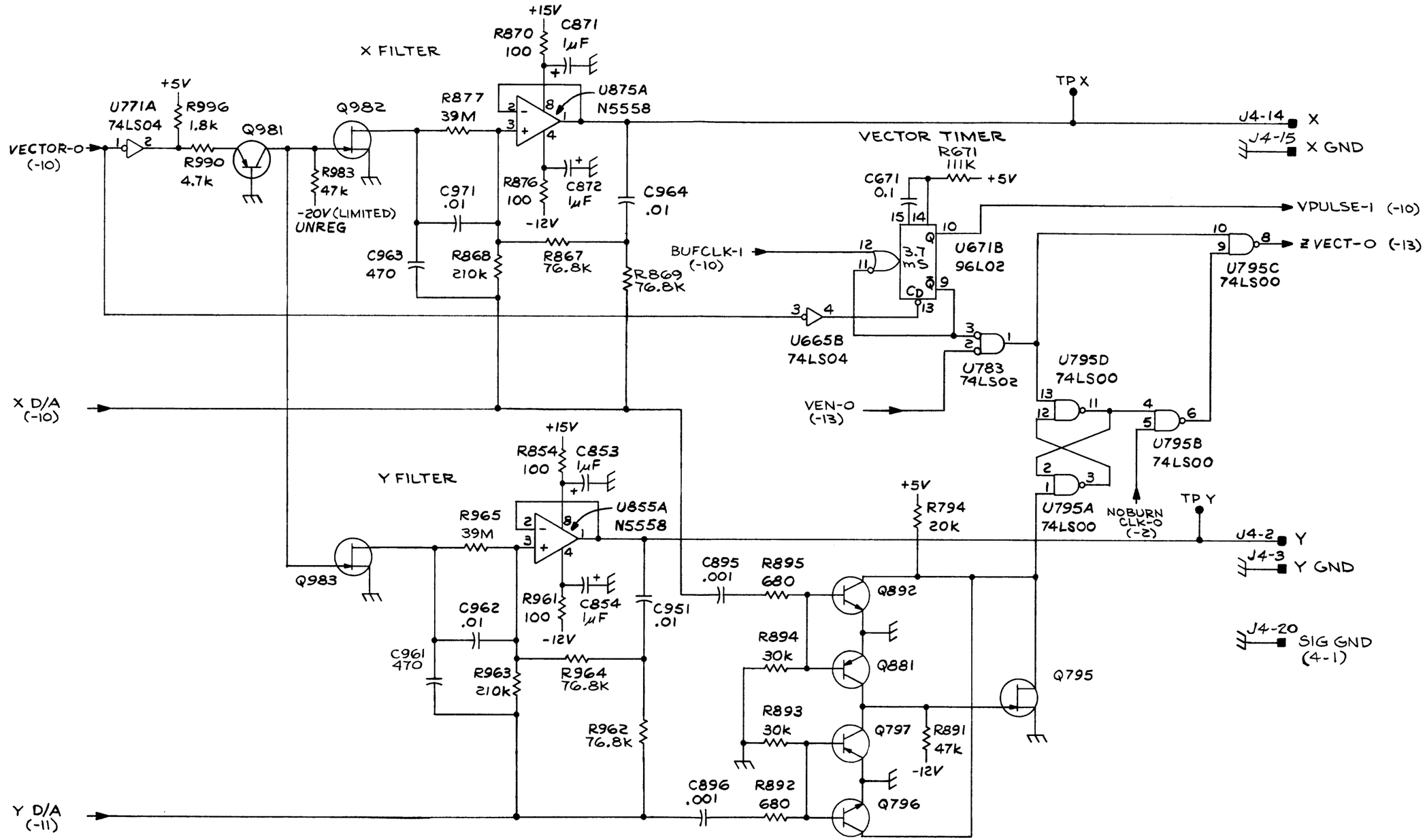

INSTRUMENT:		BOARD: CPU BOARD	PAGE:
4051	670-4008-02	DIAGRAM: DISPLAY VECTOR GEN	2-12

@

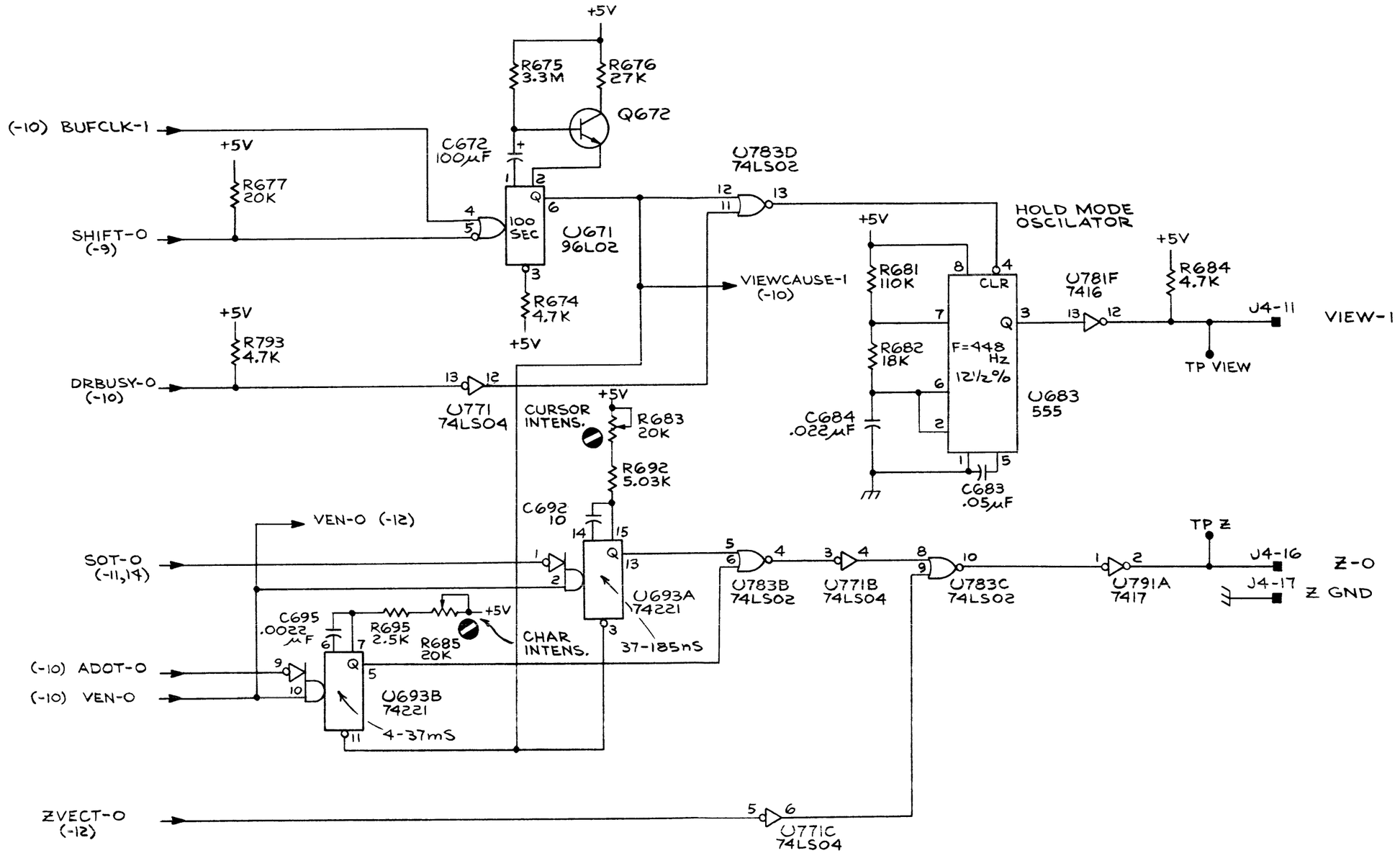

INSTRUMENT:		BOARD:	PAGE:
4051	670-4008-01	CPU BOARD	2-13
		DIAGRAM: DISPLAY HOLD & Z TIMING	

@

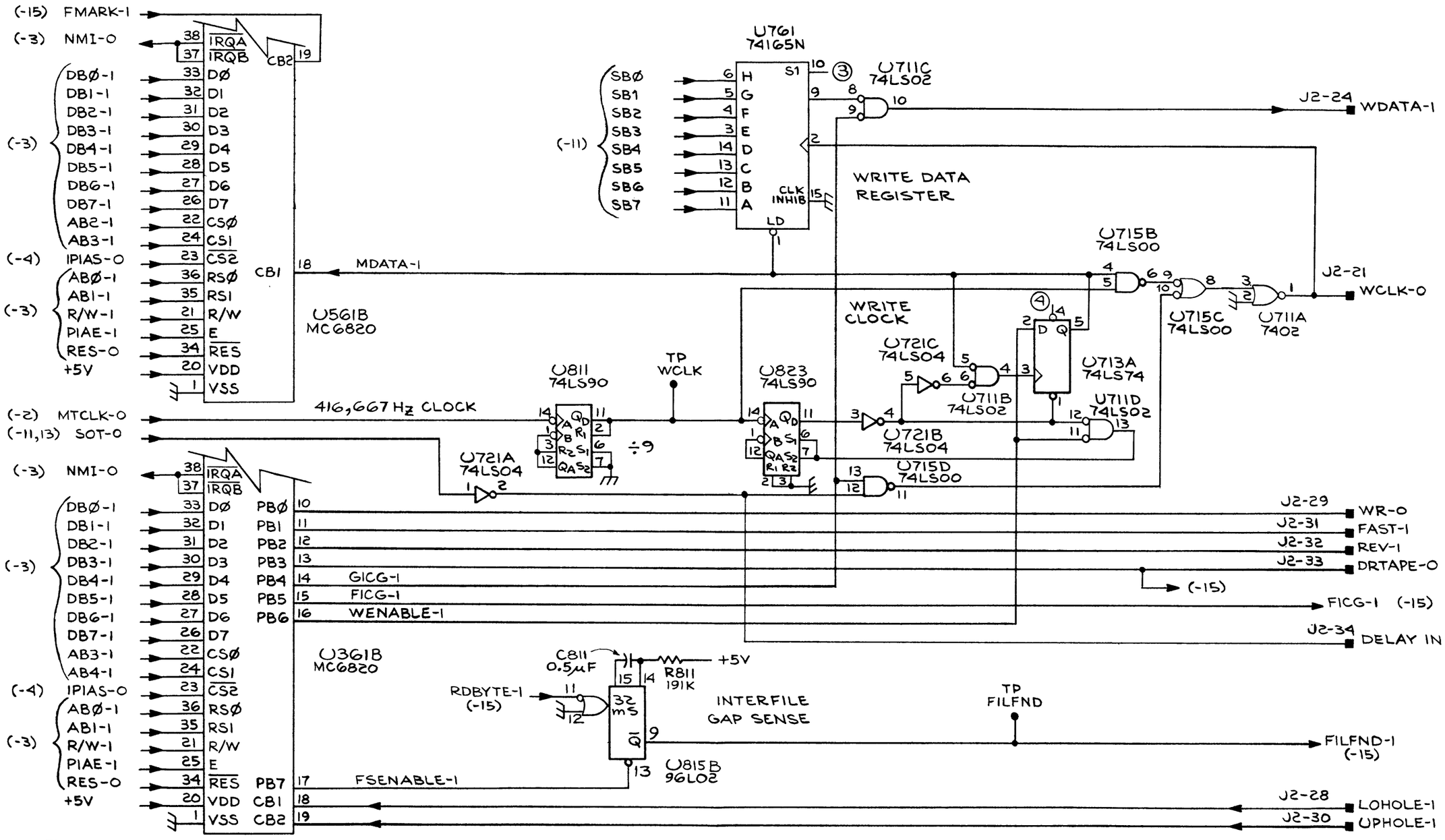

INSTRUMENT:		BOARD:	PAGE:
4051	670-4008-01	CPU BOARD	2-14
		DIAGRAM: TAPE CONTROL (PIA B PORTIONS)	

@

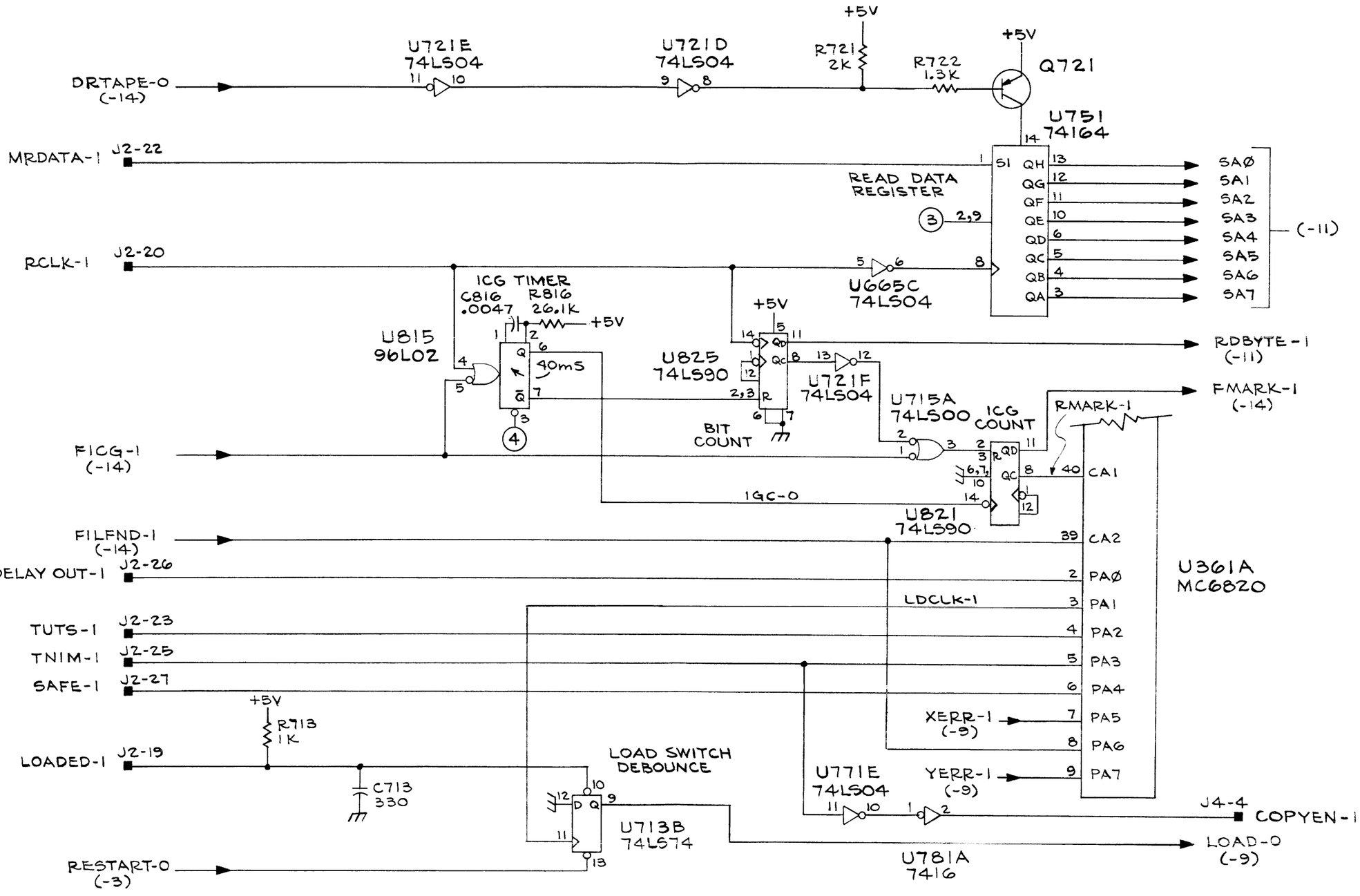

INSTRUMENT: 4051	670-4008-01	BOARD: CPU BOARD	PAGE: 2-15
		DIAGRAM: TAPE MONITOR (PIA A PORTION)	

@

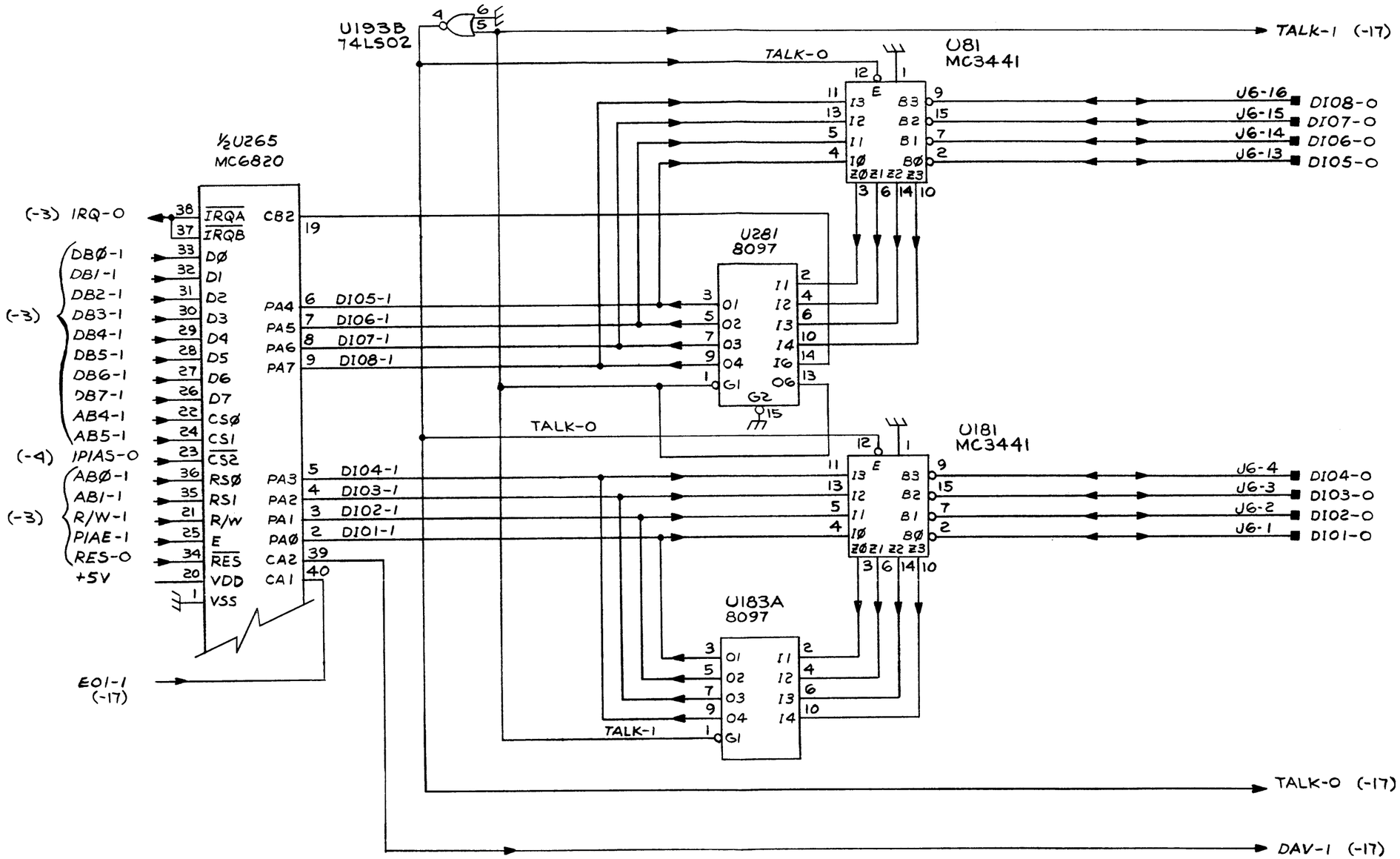

INSTRUMENT:		BOARD:	PAGE:
4051	670-4008-01	CPU BOARD	2-16
		DIAGRAM: GPIB INTERFACE	

@

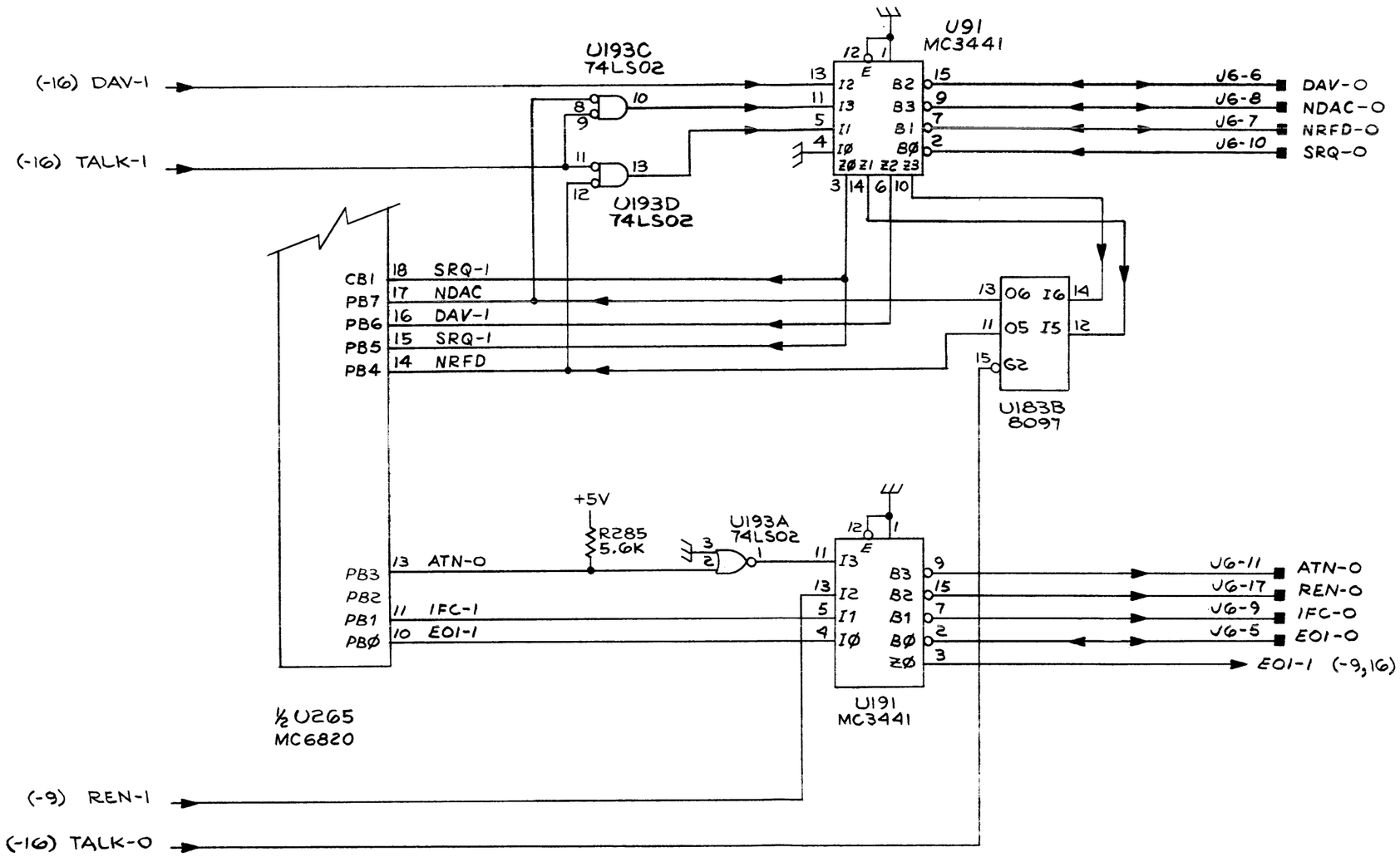

INSTRUMENT: 4051	670-4008-01	BOARD: CPU BOARD	PAGE: 2-17
		DIAGRAM: GPIB INTERFACE	

@

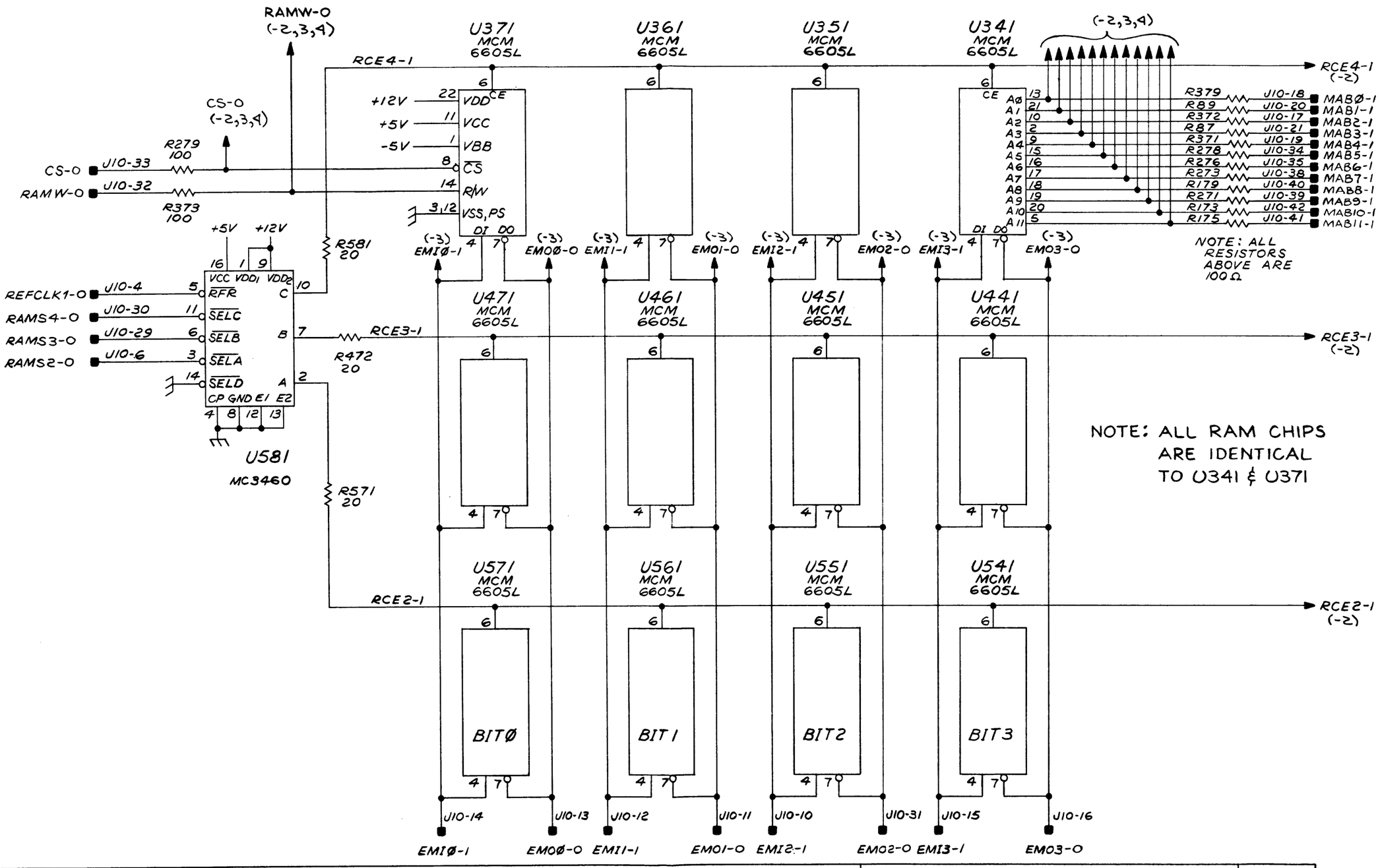

INSTRUMENT: 4051	670-4004 @	BOARD: MEMORY BOARD 1 RAM BLOCKS 2,3,4	PAGE: 3-1

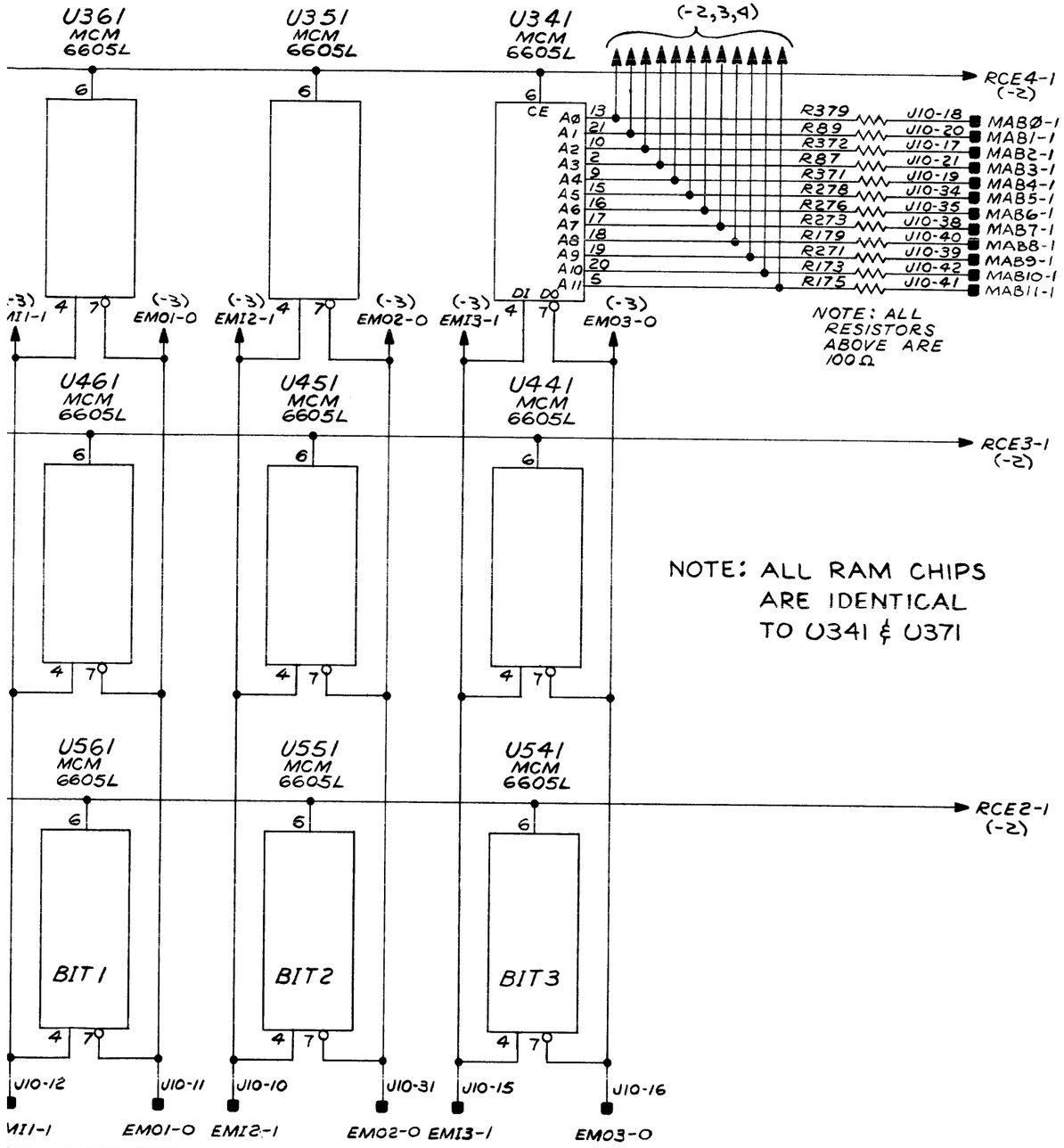

670-4004	BOARD: MEMORY BOARD 1	PAGE: 3-1
	RAM BLOCKS 2,3,4	

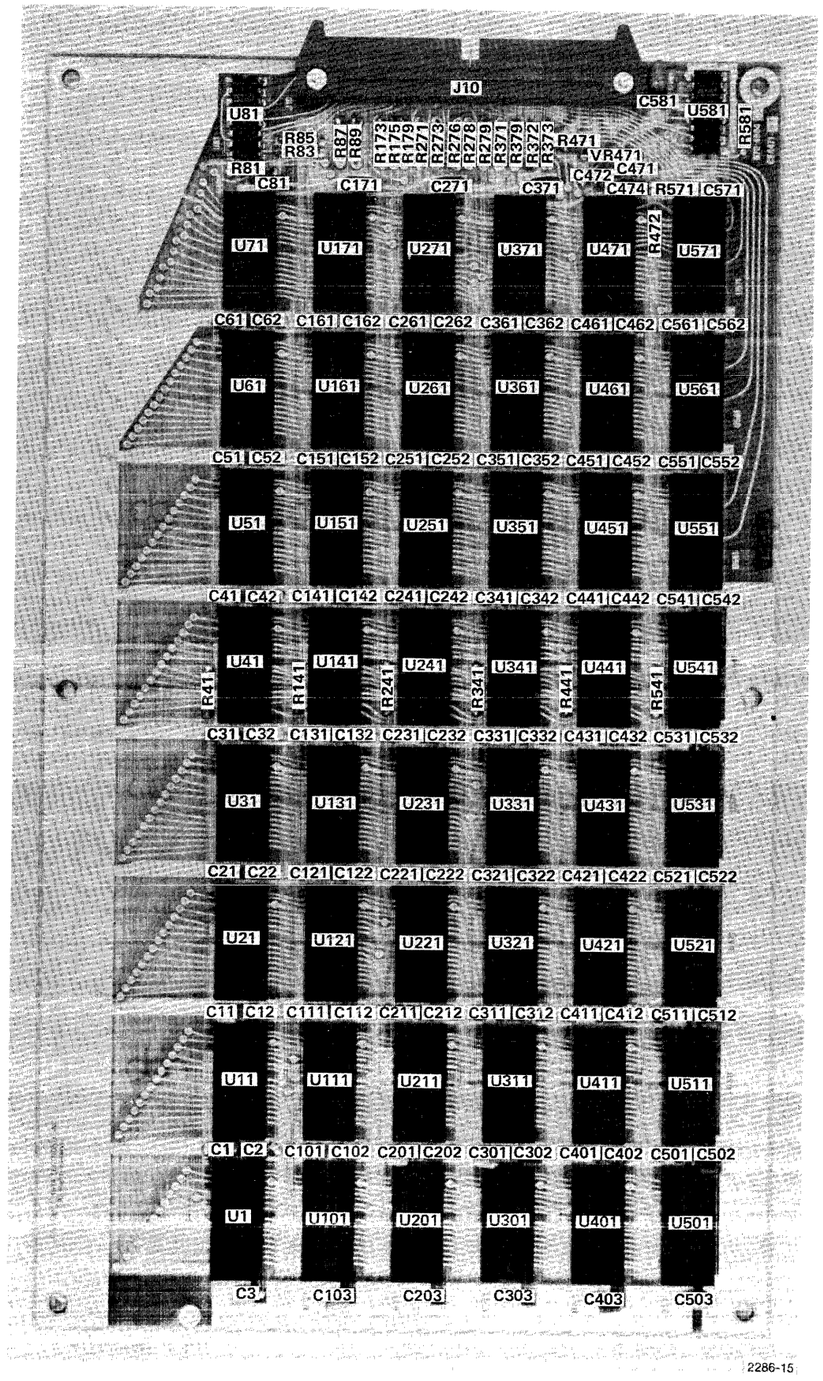

Memory boards, 16K (Option 20) 670-4004-01, 24K (Option 21) 670-4004-02, and 32K (Option 22) 670-4004-03.

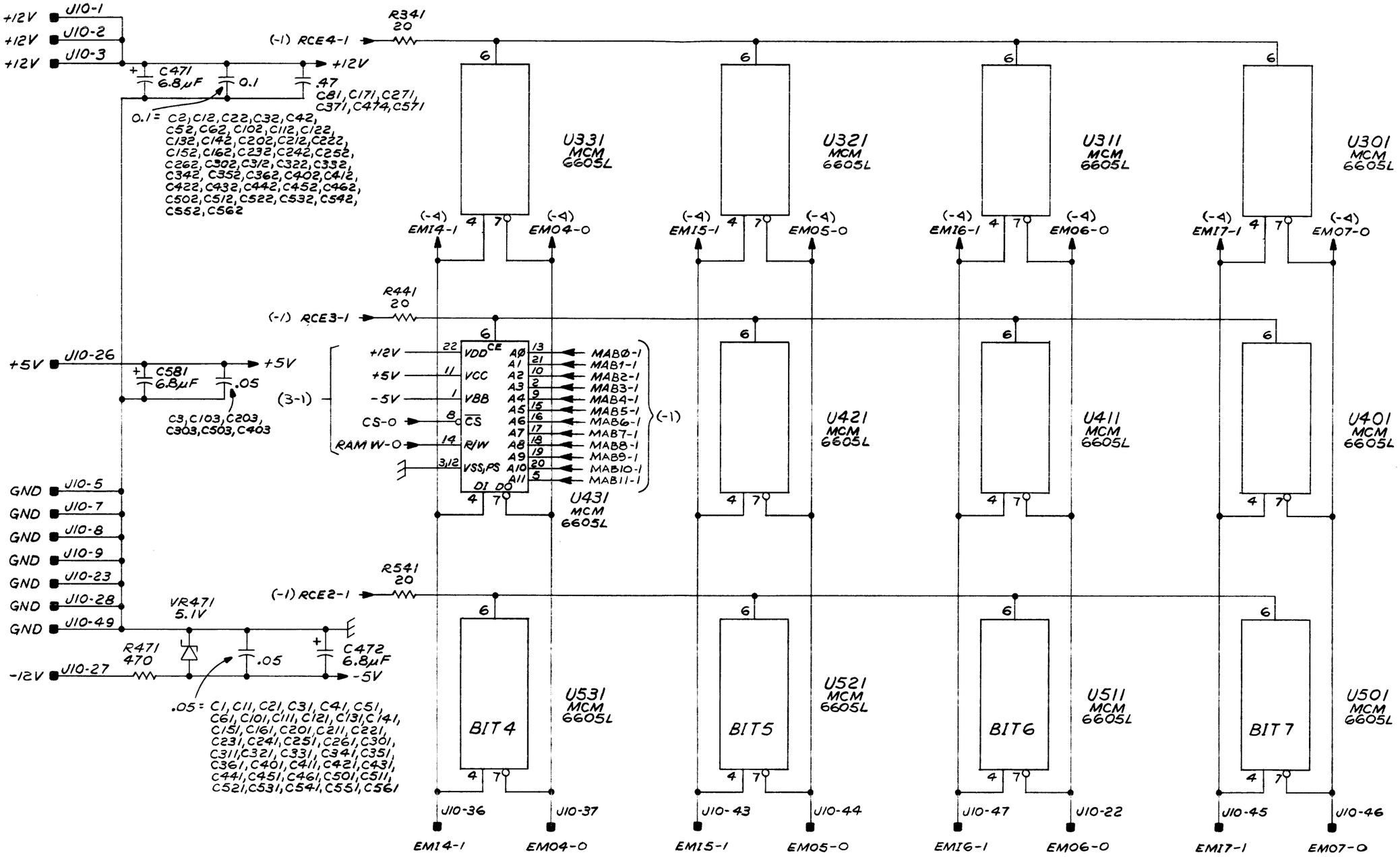

INSTRUMENT: 4051	670-4004 @	BOARD: MEMORY BOARD 1	PAGE: 3-2
		DIAGRAM: RAM BLOCKS 2,3,4	

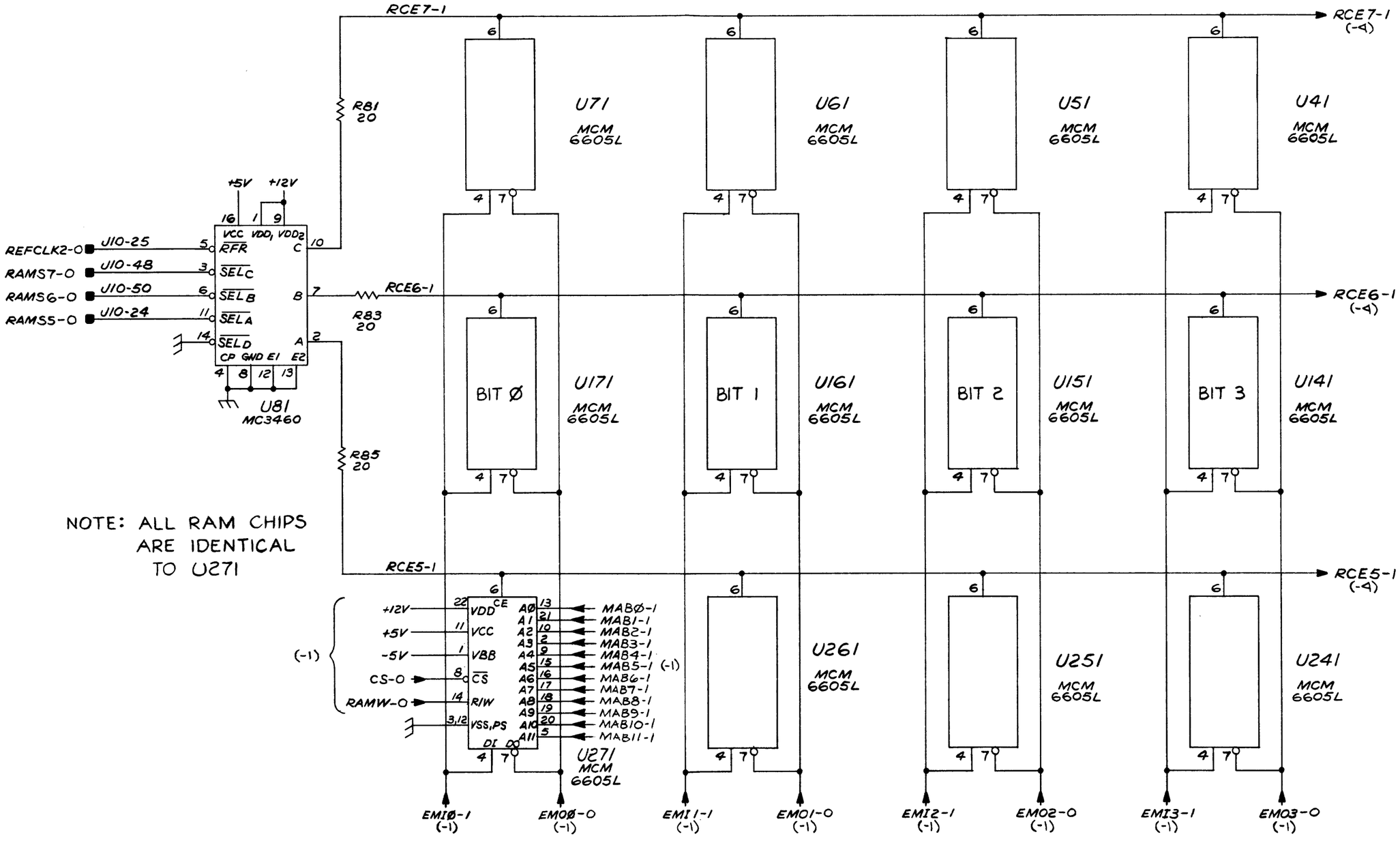

INSTRUMENT: 4051	670-4004 @	BOARD: MEMORY BOARD 1	PAGE: 3-3
		DIAGRAM: RAM BLOCKS 5,6,7	

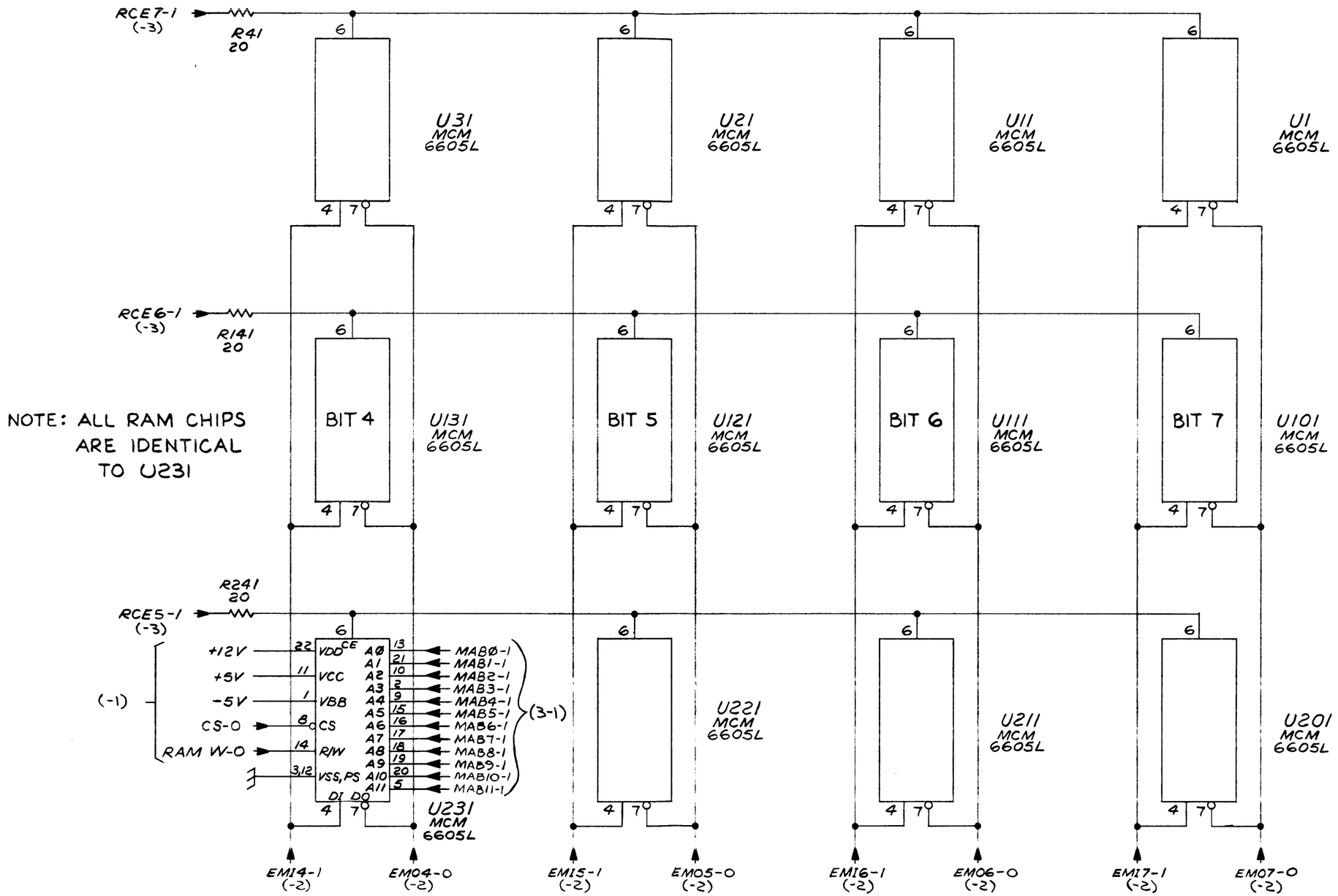

NOTE: ALL RAM CHIPS ARE IDENTICAL TO U231

INSTRUMENT: 4051	670-4004 @	BOARD: MEMORY BOARD 1	PAGE: 3-4
		DIAGRAM: RAM BLOCKS 5,6,7	

X RAMP RET J56-1 R681 10.0K R679 10.0K R678 39.2K U777B 5558 +15V2 X AMP (-3)
X HC RAMP IN J56-2 R683 10.0K R686 200K X HC GAIN R682 41.2K R782 10.0K CR678
X AXIS MPX
J54 R672 2.7Ω
+15 VOLTS +15V2 C671 10µF
GND
+5 VOLTS +5V C650 1µF
SIG GND SIG GND (2-12)
-12 VOLTS R670 2.7Ω -12V3 C672 10µF
-20 VOLTS -20V C668 6.8µF
X J55-4 X GND J55-3 R772 10.0K R773 9.76K
ORIGIN SHIFT
U791 7493 R698 470 R696 9.1K R792 18K R796 39K R798 243
ORIGIN-0 (-2) R784 470 R699 470
COPY-0 J53-2 R546 1K R688 1K CAL NORM R687 9.1K R793 18K R795 39K
Y GND J55-2 R757 243 R572 10.0K R573 9.76K
Y J55-1
KB COPY-0(9006-1) J53-1
Y HC RAMP IN J56-3 R582 10.0K R585 41.2K Y HC GAIN R681 200K
Y RAMP RET J56-4 R588 10.0K
COPYEN-1 J59-1
BIAS (-3)
INTER -0 J52-5 R652 470
INTER GND J52-6 R651 1K U552A 7438 R453 4.7K
READ-0 J52-9
WAIT-0 J52-4 U552B 7438
Z-0 J53-4
Z GND J53-3
TARSIG-1 (-2) R466 1K
R774 10.0K U777A 5558 CR677 R776 10.0K CR775
X HC POS R687 100K R787 100K R778 33.2K R786 6.34K CR781
* NOTE R551 10K FOR 00 & 01 VERSIONS
Q674 U555A 7416 R548 27K R547 4.7K Q552 R673 1K -20V CR575
+15V2 R452 10K Q551 -12V3
R576 10.0K R973 10K * SEE NOTE -20V
Y AXIS MPX R574 10.0K U577A 5558 CR475
VR358 5V Q355 Q354 R357 470 R356 470 R451 47K C545 0.1 R450 10K
J52-3 MAKE COPY-0
R581 10.0K R578 39.2K U577B 5558 CR476 R587 10.0K
Y AMP (-3)
Y HC POS R685 100K R684 100K R585 33.2K R683 6.34K CR586
Q473 R472 1K -20V
C659 47 R659 3.65K U552C 7438 R658 2.7K U557B 74221
INTERROGATE PULSE IMER
R465 1K COPYEN-1 (-2,9)
U555B 7416 R656 4.7K U552D 7438 U555D 7416 R657 2.7K Q338 TP339
Z MPX-0 (-9)
J52-7 TARSIG-0
J52-8 GND

4051

DISPLAY MPX 4-1
670-4087-00,01,02,03

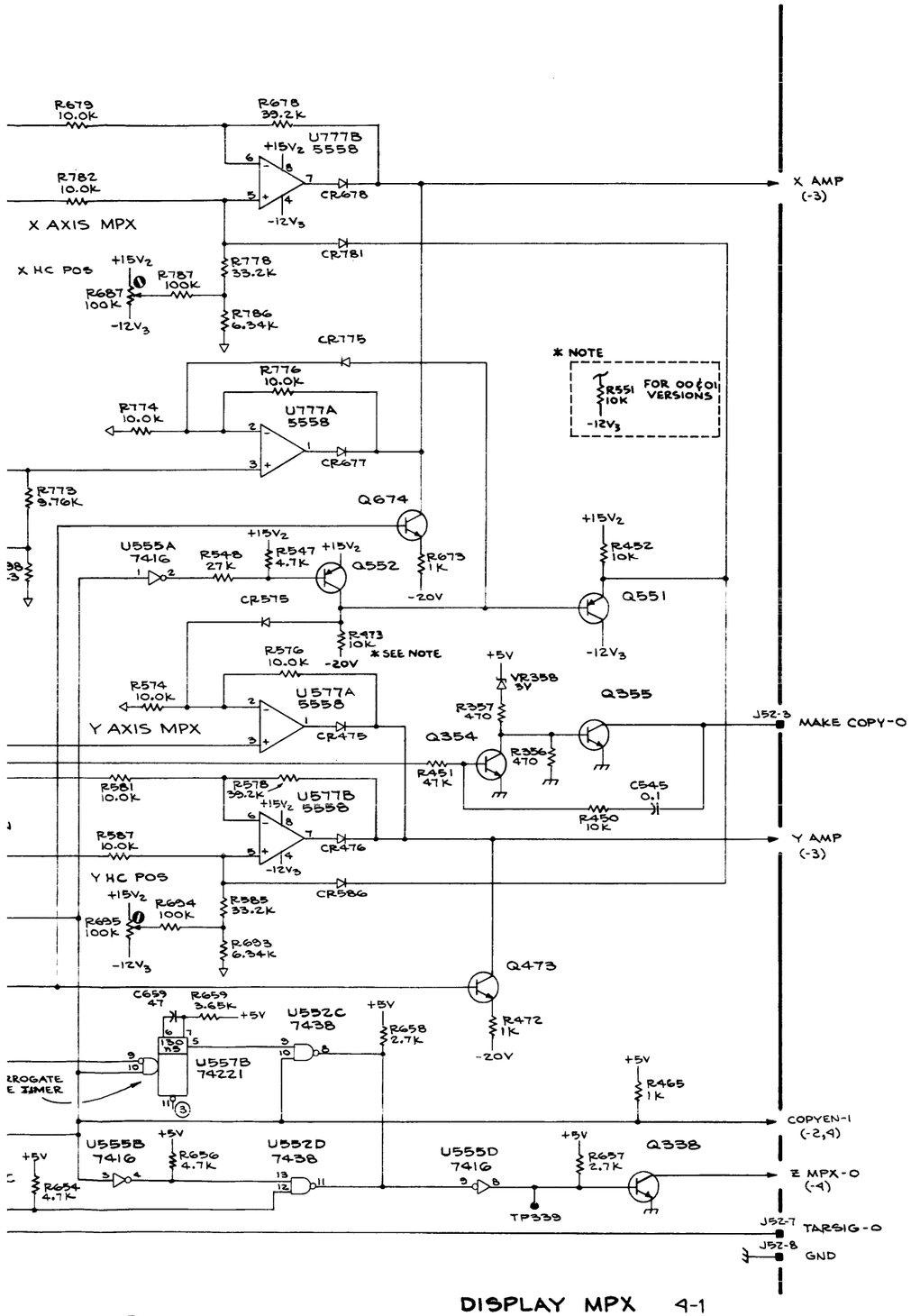

DISPLAY MPX 4-1

670-4087-00,01,02,03

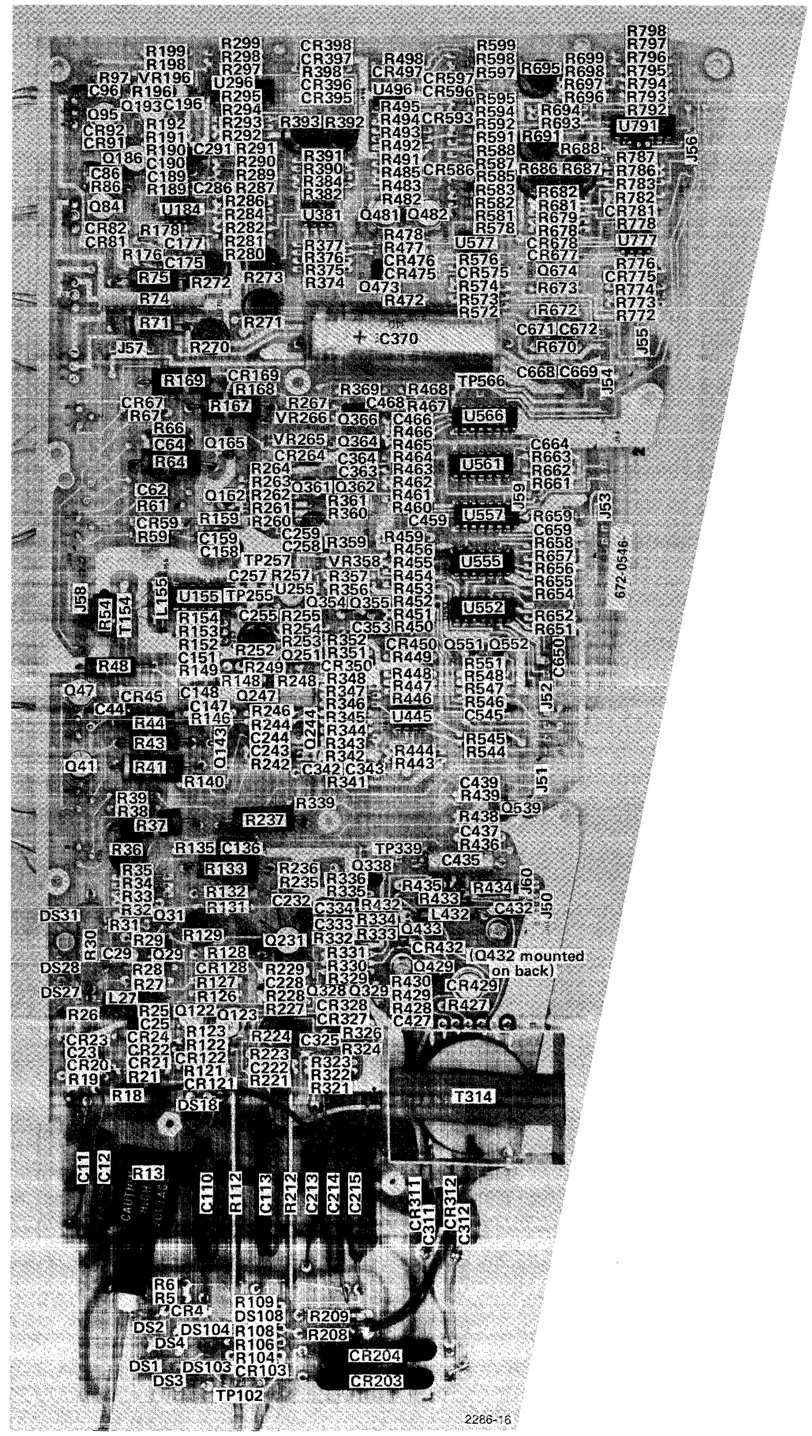

Display boards 670-4087-00, 670-4087-01, 670-4087-02, 670-4087-03, or assembly.

+175V SUPPLY

HARD COPY
CRT READOUT AMP.

ERASE TIMER

TARGET OR STORAGE
BACKPLATE CONTROL

COLLIMATION CONTROL

FLOOD GUN CONTROL

4051

STORAGE 4-2
670-4087-00

+320V J51-1 R339 47 → +320V$_1$ (C158 0.1)
+185V J51-2 R39 47 * → +185V$_1$
*R39'S VALUE IS 100Ω FOR THE 01 AND 02 VERSIONS.
F.G. HEATER J54-5 → F.G. HEATER
+15V J54-4 R545 2.7Ω → +15V$_1$ (C258 1μF)
GND
-12V J54-3 R544 2.7Ω → -12V$_1$ (C259 1μF)
R153 10 → -12V$_2$ (C151 1μF)

+320V$_1$ R140 100 (C244 .01) R41 43K → Q1036 (+185V$_1$)
R242 10K (C243 .001) R343 1K → Q244
C342 10 R341 130K C343 2.2
+15V$_1$ R446 3.3M R444 6.98K R443 8.06K → U445 -741 → R344 4.7K
R342 6.19K
+175V SUPPLY

+5V R663 4.7K → J53-7 DRBUSY-0
+175V (-4)

+320V$_1$ R43 130K Q41 Q1039 R44 130K Q47
THRES-HOLD R252 10K -12V$_2$ R253 2.7K R254 470 R255 10K
C255 650 C257 650 C44 .01 CR45 Q1044 R154 1K R152 1K
T154 L155 5μh U155 733 TP255 TP257 TP256
+5V R454 4.7K C466 68 R467 10K
U255 LM311 U566A 74221 → TARSIG-1 (-1)
HARD COPY CRT READOUT AMP.

OP LEVEL
+15V$_1$ R244 6.8K R146 100 Q143 Q247 R249 100 R246 100 R249 100 C148 100 R148 499K
R345 2.2K R347 16.2K R248 10K R346 19.1K R348 10K -12V$_1$
CR350 Q251 R351 100 R352 100K -12V$_1$
+175V R449 150K C353 10μF
U561A 7416 → U566B 74221 (950 ms)
+5V R468 33.2K C468 39μF
U561D 7416N
+5V R459 18.7K C459 1μF R662 100
U561E 7416 C664 .001
14ms
ERASE-0 J53-6 → U557A 74221 → ③
ERASE TIMER
+15V$_1$ R447 1K CR450 R448 1.5K
TARGET OR STORAGE BACKPLATE CONTROL

R48 220K
+320V$_1$ R64 68K
+185V$_1$ R61 47 C62 120 Q1059 CR59
Q165 C64 .01 R66 100
R59 47 C159 0.1
J58-5 CE2
CE1 & CE2
J58-3 CE1

ORIGIN-0 (-1) V1
STB
TARGET
J58-4

CHASSIS GND J54-1,2
+5V J54-9 → +5V (C650 1μF C668 6.8μF)
-20V J54-8 → -20V

+5V R960 1K R461 1.8K C364 .001 R462 10K -12V$_1$ Q361
R261 11.3K R361 4.99K CE R359 10K -12V$_1$
+15V$_1$ R264 6.8K R263 100 -12V$_1$ Q162
COLLIMATION CONTROL

R159 137K
+175V R38 47 Q1067 R169 150K CR169 CR67 R67 47 → J58-6 ANODE
+320V R167 120K R267 100 C370 50μF R369 1M VR266 100V R168 100 VR265 47V
J58-8 CATHODE
+150V (-4)
Q366 R358 10K R458 1K -20V → J58-1 -20V
F.G. HEATER → J58-2
J58-7 SPARE

R464 1.8K C363 .001 R463 10K -12V Q362 R260 4.99K R360 4.99K R262 46.4K -12V$_1$ -12V$_1$
U555F 7416
+5V R455 1K R456 1K Q459 Q364
CR264

COPYEN-1 (-1) J53-6 → U561F 7416N
U561C 7416 U561B 7416 U555F 7416
VIEW-1 J53-5
R457 1K
+5V R466 1K → ③
* HAND MOD VERSION
FLOOD GUN CONTROL

4051
STORAGE 4-2A
670-4087-01,02,03
@

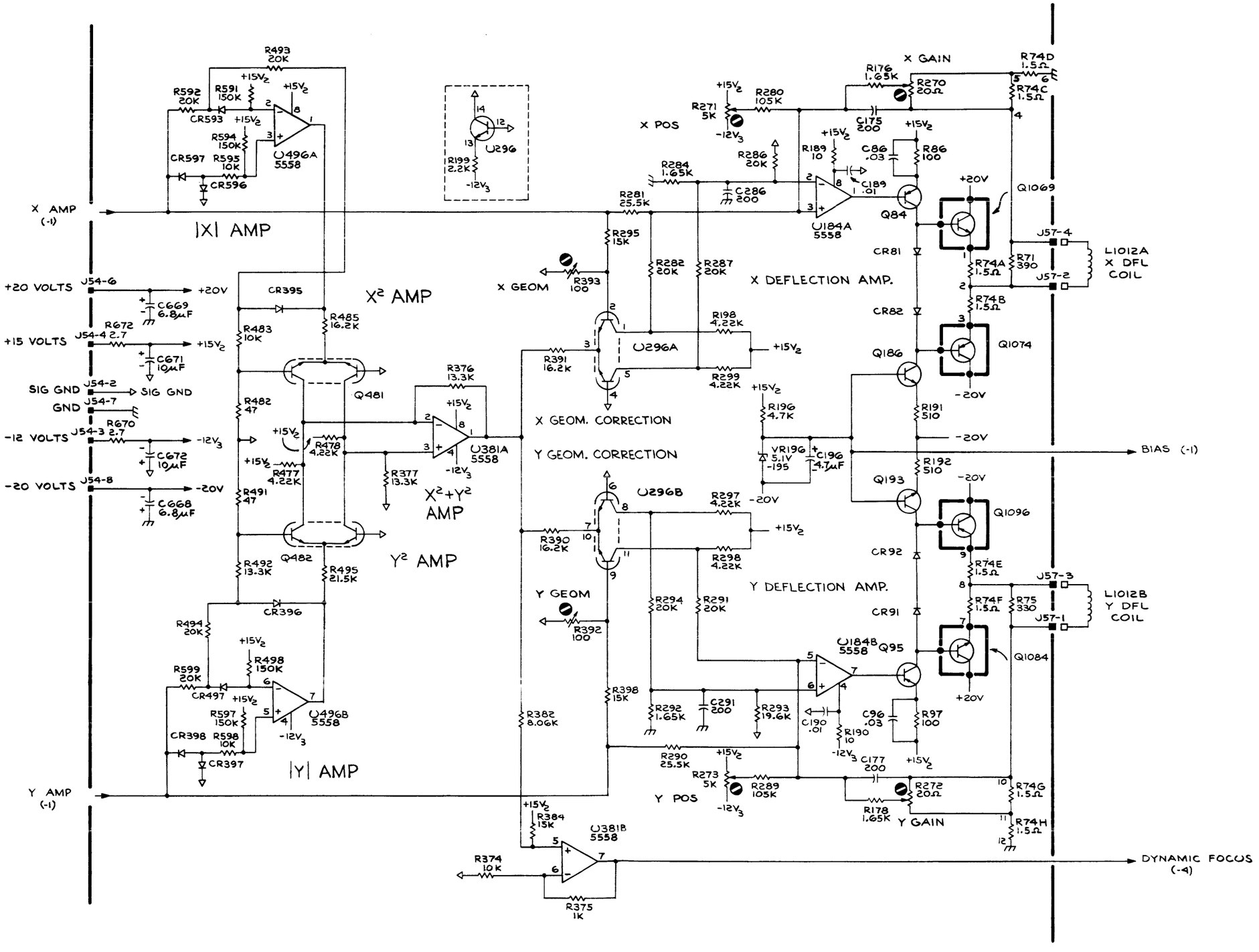

4051

DEFLECTION AMPS 4-3

670-4087-00,01,02,03

@

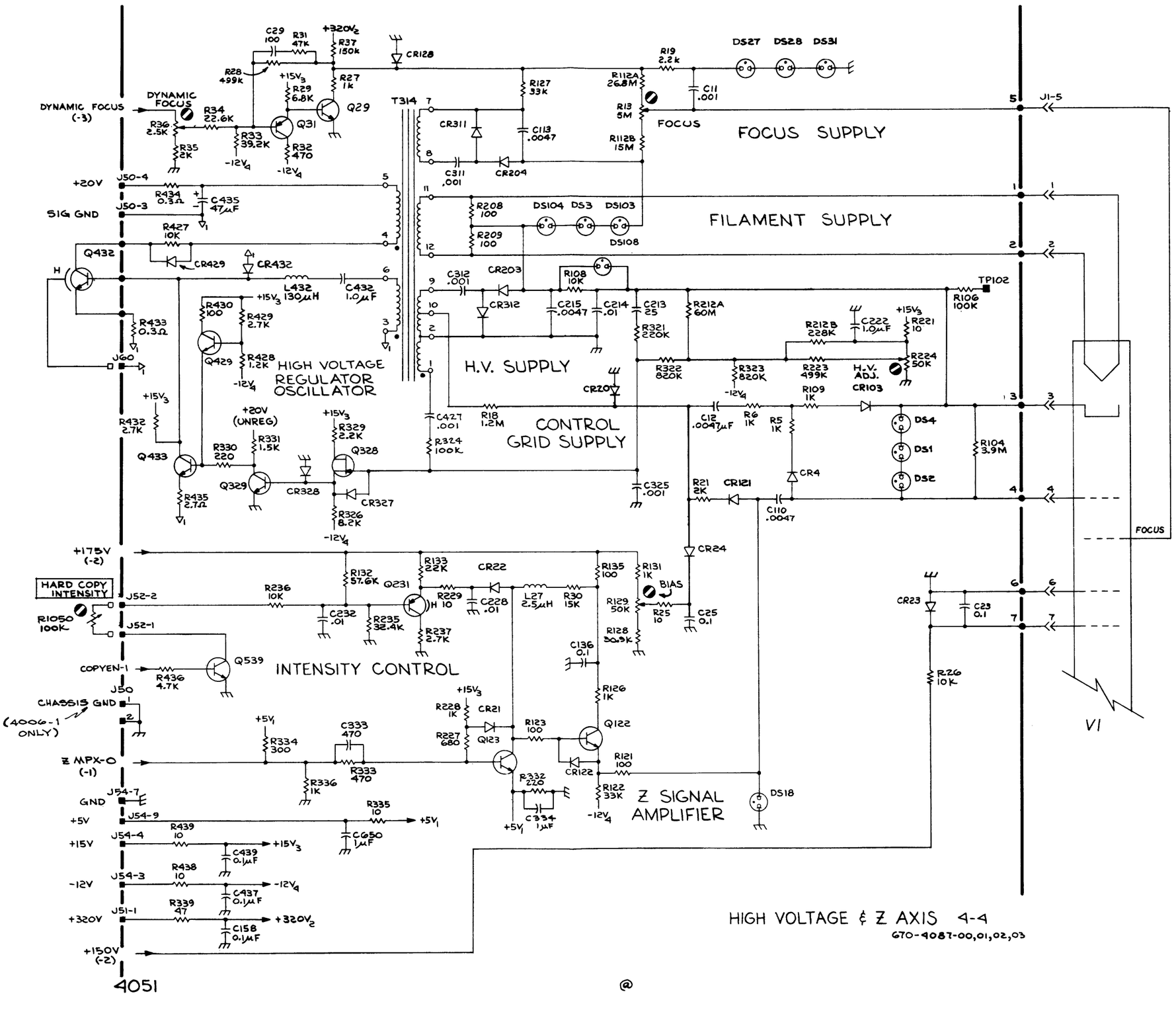
FOCUS SUPPLY
FILAMENT SUPPLY
H.V. SUPPLY
HIGH VOLTAGE REGULATOR OSCILLATOR
CONTROL GRID SUPPLY
INTENSITY CONTROL
Z SIGNAL AMPLIFIER
DYNAMIC FOCUS (-3)
SIG GND
+20V
+320V2
+15V3
-12V4
+175V (-2)
HARD COPY INTENSITY
COPYEN-1
CHASSIS GND (4006-1 ONLY)
Z MPX-O (-1)
GND
+5V
+15V
-12V
+320V
+150V (-2)
FOCUS
BIAS
H.V. ADJ.
DS27 DS28 DS31
DS104 DS3 DS103 DS108
DS4 DS1 DS2
DS18
J1-5
J50-4
J50-3
J50
J52-2
J52-1
J54-7
J54-9
J54-4
J54-3
J51-1
J60
TP102
T314
Q432 Q429 Q433 Q329 Q328 Q29 Q31 Q231 Q539 Q123 Q122
CR128 CR311 CR204 CR203 CR312 CR429 CR432 CR328 CR327 CR20 CR121 CR4 CR24 CR22 CR21 CR122 CR23 CR103
R19 2.2k
R112A 26.8M
R13 5M
R112B 15M
R127 33k
R208 100
R209 100
R108 10K
R212A 60M
R212B 228K
R321 220K
R322 820K
R323 820K
R223 499K
R224 50K
R221 10
R106 100K
R109 1K
R6 1K
R5 1K
R104 3.9M
R21 2K
R18 1.2M
R324 100K
R325 .001
R326 8.2K
R327 680
R328 2.2K
R329 2.2K
R330 220
R331 1.5K
R332 220
R333 470
R334 300
R335 10
R336 1K
R122 33K
R121 100
R123 100
R126 1K
R228 1K
R227 680
R133 22K
R132 57.6K
R135 100
R131 1K
R129 50K
R25 10
R128 30.9K
R30 15K
R229 10
R235 32.4K
R237 2.7K
R232 .01
R136 10K
R26 10K
R427 10K
R428 1.2K
R429 2.7K
R430 100
R431 2.7K
R433 0.3Ω
R434 0.3Ω
R435 2.7Ω
R436 4.7K
R439 10
R438 10
R339 47
C29 100
R31 47K
R37 150K
R28 499K
R27 1K
R29 6.8K
R34 22.6K
R36 2.5K
R35 2K
R33 39.2K
R32 470
C11 .001
C113 .0047
C311 .001
C312 .001
C215 .0047
C214 .01
C213 25
C222 1.0μF
C12 .0047μF
C110 .0047
C23 0.1
C25 0.1
C136 0.1
C228 .01
C232 .01
C427 .001
C325 .001
C435 47μF
C432 1.0μF
C333 470
C334 1μF
C650 1μF
C439 0.1μF
C437 0.1μF
C158 0.1μF
L432 130μH
L27 2.5μH
VI
4051
@
HIGH VOLTAGE & Z AXIS 4-4
G70-4087-00,01,02,03

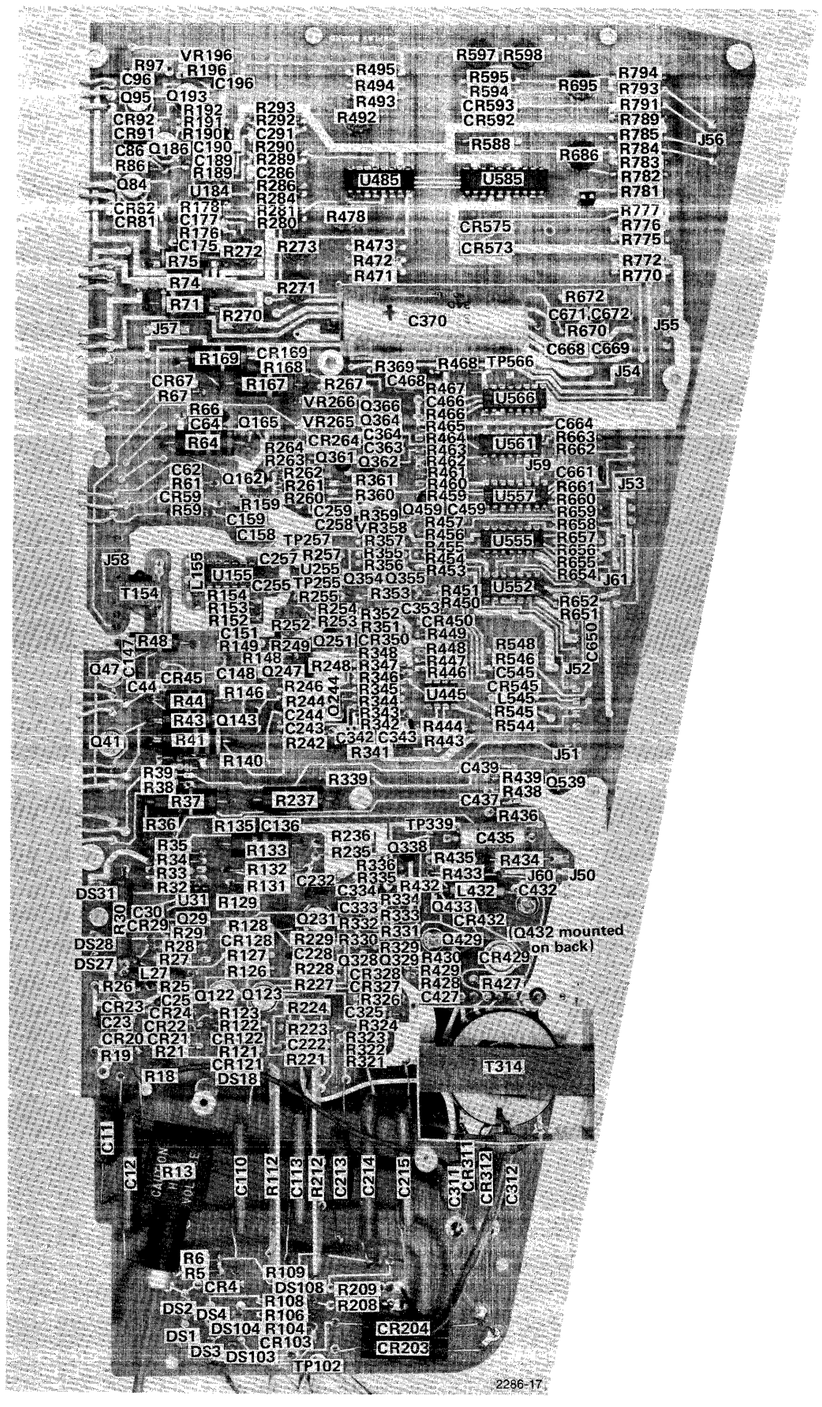

Display board 670-4087-06.

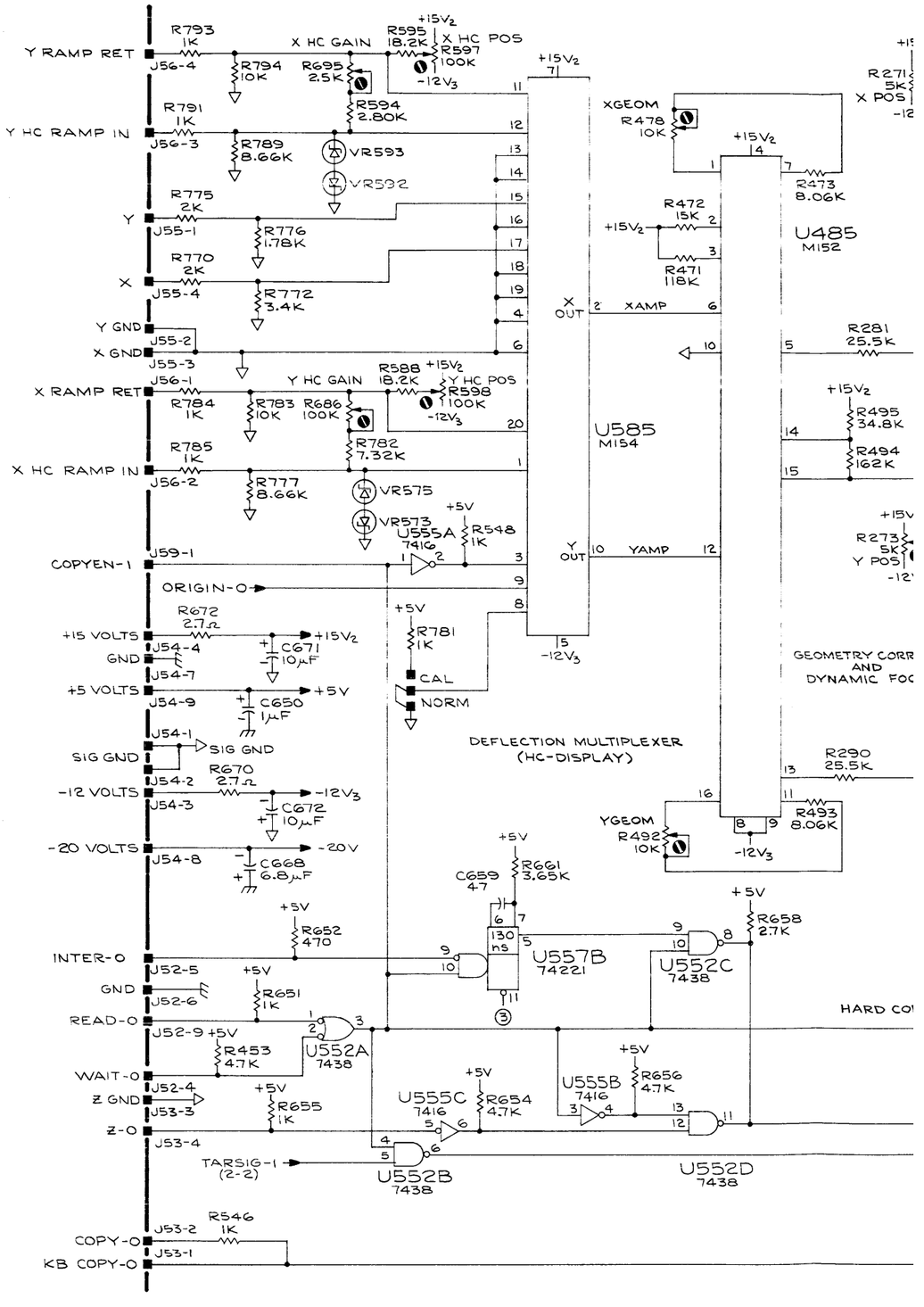

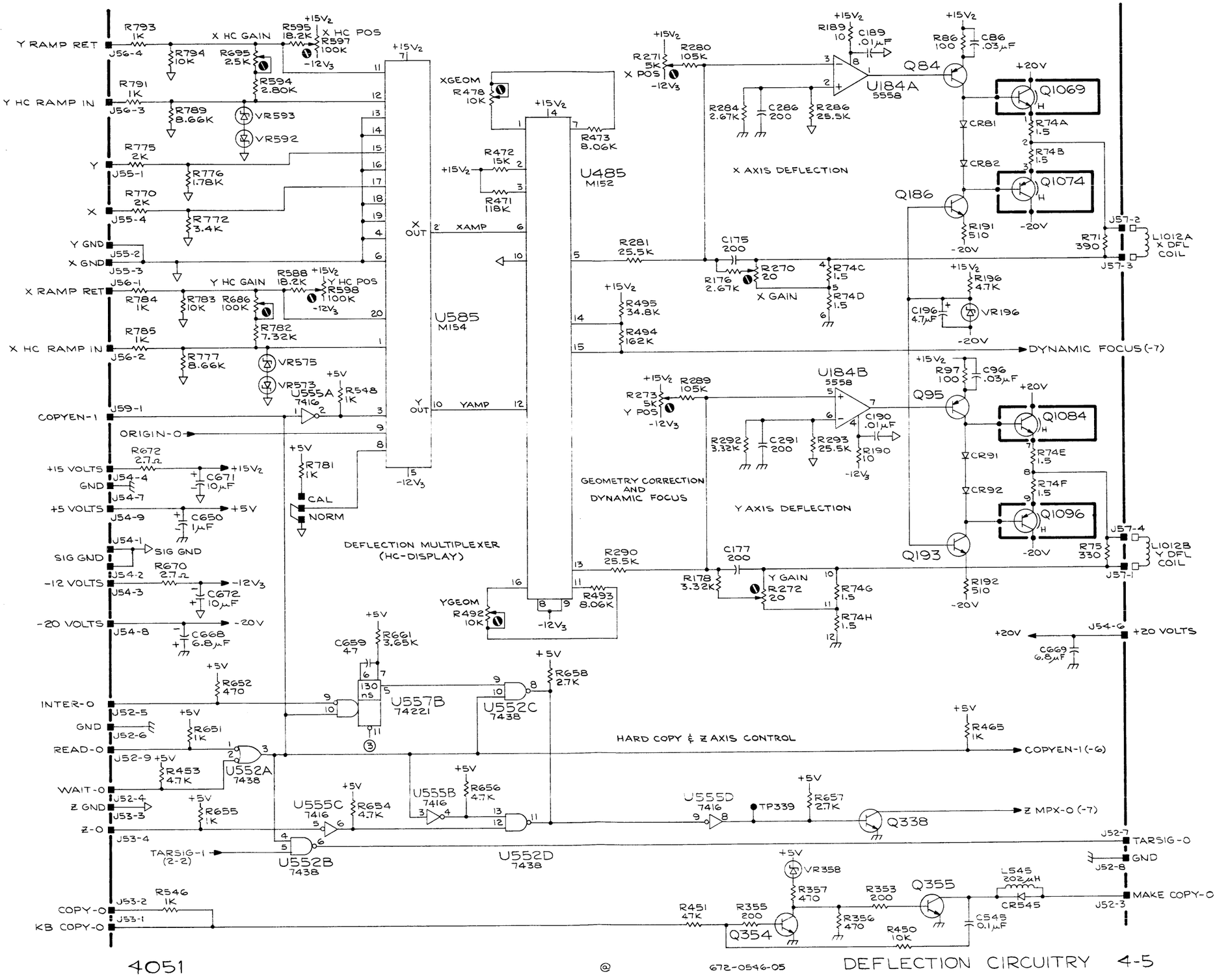
Y RAMP RET
J56-4
R793 1K
R794 10K
X HC GAIN
R695 2.5K
R595 18.2K
+15V2
X HC POS
R597 100K
-12V3
R594 2.80K
Y HC RAMP IN
J56-3
R791 1K
R789 8.66K
VR593
VR592
Y
J55-1
R775 2K
R776 1.78K
X
J55-4
R770 2K
R772 3.4K
Y GND
J55-2
X GND
J55-3
X RAMP RET
J56-1
R784 1K
R783 10K
R686 100K
Y HC GAIN
R588 18.2K
Y HC POS
R598 100K
R782 7.32K
X HC RAMP IN
J56-2
R785 1K
R777 8.66K
VR575
VR573
U555A 7416
+5V
R548 1K
COPYEN-1
J59-1
ORIGIN-0
R672 2.7Ω
+15 VOLTS
J54-4
C671 10µF
GND
J54-7
+5 VOLTS
J54-9
C650 1µF
J54-1
SIG GND
J54-2
R670 2.7Ω
-12 VOLTS
J54-3
C672 10µF
-20 VOLTS
J54-8
C668 6.8µF
R781 1K
CAL
NORM
DEFLECTION MULTIPLEXER (HC-DISPLAY)
XGEOM
R478 10K
R472 15K
R471 118K
R473 8.06K
U485 M152
X OUT
XAMP
Y OUT
YAMP
U585 M154
YGEOM
R492 10K
R493 8.06K
R271 5K
X POS
R280 105K
R189 10
C189 .01µF
U184A 5558
R284 2.67K
C286 200
R286 25.5K
X AXIS DEFLECTION
R86 100
C86 .03µF
Q84
+20V
Q1069
CR81
R74A 1.5
R74B 1.5
CR82
Q1074
Q186
R191 510
-20V
J57-2
R71 390
L1012A X DFL COIL
J57-3
R281 25.5K
C175 200
R176 2.67K
R270 20
X GAIN
R74C 1.5
R74D 1.5
R196 4.7K
C196 4.7µF
VR196
DYNAMIC FOCUS(-7)
R495 34.8K
R494 162K
R273 5K
Y POS
R289 105K
U184B 5558
R292 3.32K
C291 200
R293 25.5K
R190 10
GEOMETRY CORRECTION AND DYNAMIC FOCUS
Y AXIS DEFLECTION
R97 100
C96 .03µF
Q95
Q1084
CR91
R74E 1.5
R74F 1.5
CR92
Q1096
Q193
R192 510
J57-4
R75 330
L1012B Y DFL COIL
J57-1
R290 25.5K
C177 200
R178 3.32K
Y GAIN
R272 20
R74G 1.5
R74H 1.5
J54-6
+20 VOLTS
C669 6.8µF
R661 3.65K
C659 4.7
U557B 74221
130 ns
U552C 7438
R658 2.7K
R652 470
INTER-0
J52-5
GND
J52-6
R651 1K
READ-0
J52-9
R453 4.7K
U552A 7438
WAIT-0
J52-4
Z GND
J53-3
R655 1K
Z-0
J53-4
U555C 7416
R654 4.7K
U555B 7416
R656 4.7K
U552B 7438
TARSIG-1 (2-2)
U552D 7438
HARD COPY & Z AXIS CONTROL
R465 1K
COPYEN-1 (-6)
U555D 7416
TP339
R657 2.7K
Q338
Z MPX-0 (-7)
J52-7
TARSIG-0
GND
J52-8
VR358
R357 470
R353 200
Q355
L545 202µH
CR545
MAKE COPY-0
J52-3
R451 47K
R355 200
Q354
R356 470
R450 10K
C545 0.1µF
COPY-0
J53-2
R546 1K
KB COPY-0
J53-1

©

+320V J51-1 R339 47 +320V$_1$ C158 0.1
+185V J51-2 R39 47 +185V$_1$
+20V J54-5 +20V
+15V J54-4 R545 2.7Ω +15V$_1$ C258 1μF
-12V J54-3 R544 2.7Ω -12V$_1$ C259 1μF
R153 10 -12V$_2$ C151 1μF

+320V$_1$ R140 100 C244 .01 R41 43K R40 180K CR40 Q1036 +185V$_1$ +175V
+15V$_1$ R446 3.3M R444 6.98K R443 8.06K U445 R342 6.19K R343 1K C243 .001 R242 2.7K R344 4.7K Q244 C342 10 R341 130K C343 2.2
+175V SUPPLY

+5V R663 4.7K
J53-7 DRBUSY-0
+175V(-7)
+320V$_1$ R43 130K Q91 Q1039 R44 130K Q47 T154 C44 .01 CR45 Q1044 R152 1K
THRES-HOLD R252 10K -12V$_2$ R253 2.7K R254 470 R255 10K C255 650 L155 5μh U155 733 TP255 TP257 R154 1K -12V$_2$ C257 650 R257 10K
+5V R454 4.7K C466 68 R467 10K TP566 400 ns U566A 74221 U255 LM311 -12V$_1$
TARSIG-1 (-6)
CRT READOUT AMP.

ORIGIN-0 (-6) V1
STB J58-4
+15V$_1$ R146 100 R244 6.8K Q143 Q247 R246 100 -12V$_1$ R149 100 C148 100 R148 499K
OP LEVEL R347 16.2K R249 100 R248 10K R348 10K
R48 220K

ERASE-0 J53-6
CHASSIS GND J54
+5V J54 +5V C650 1μF C668 6.8μF -20V J54 -20V
GND J53-3
READ-1 (-G) J61-1
+15 VOLTS +15V
+5 VOLTS +5V
GND
SPARE
SPARE
VIEW-1 J53-5

U561E 7416 C664 .001 R662 100
+5V R457 18.7K C459 1μF 14ms U557A 74221
+5V C468 39μF R468 33.2K 950 ms U566B 74221
U561D 7416
ERASE PULSE GEN.

+175V R449 150K C353 10μF R351 100 U561A 7416 CR450 R352 100K Q251 CR350 R345 2.2K R346 19.1K R447 1K R448 1.5K -12V$_1$
ERASE STORAGE BACKPLATE CONTROL

+320V$_1$ R64 68K C62 120 +185V$_1$ RG1 47 Q1059 CR59 Q165 CG4 .01 RG6 100
+320V R169 150K CR169 CR67 R168 100 R67 47 Q1067 +175V R38 47
R167 120K R267 100 C370 50μF R369 1M VR266 VR265 Q364 CR264 R455 1K +5V
RG59 1K RG60 1K +5V Q959 R456 10K R460 1K -20V Q366 -20V

+5V R459 1K R462 1.8K Q361 C364 .001 R461 10K -12V$_1$ R261 11.3K R361 4.99K CE R359 10K -12V$_1$
+15V$_1$ R264 6.8K Q162 R263 100 -12V$_1$
COLLIMATION CONTROL
R159 137K
R59 47 C159 0.1

R464 1.8K C363 .001 R463 10K -12V Q362 R260 4.99K R360 4.99K -12V$_1$ R262 46.4K -12V$_1$
U555E 7416
FLOOD GUN CONTROL

U561F 7416
R466 1K +5V ③

J58-3 CE1 & CE2
J58-5
J58-6 ANODE
J58-8
+150V (-7)
J58-1 -20V
J58-2 +20V
J58-7 F.G. HEATER SPARE

4051

CRT READOUT, STORAGE & +175 VOLTS REGULATOR 4-G
672-0546-05

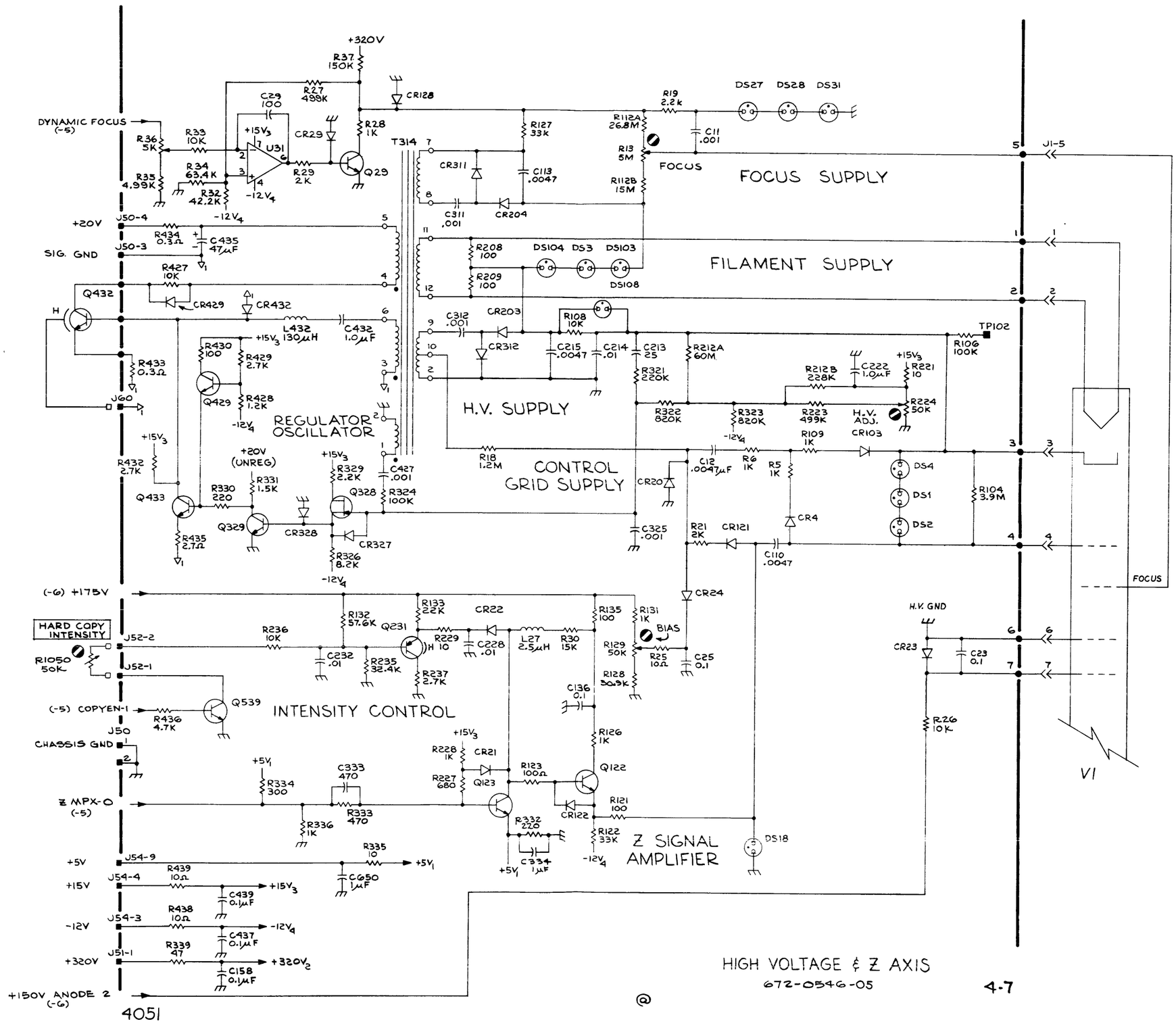
+320V
R37 150K
R27 499K
C29 100
CR128
DYNAMIC FOCUS (-5)
R36 5K
R33 10K
R34 63.4K
R35 4.99K
R32 42.2K
+15V3
U31
CR29
R28 1K
R29 2K
Q29
-12V4
T314
R127 33K
CR311
C113 .0047
C311 .001
CR204
R19 2.2K
R112A 26.8M
R13 5M
R112B 15M
FOCUS
C11 .001
DS27 DS28 DS31
FOCUS SUPPLY
J1-5
+20V
SIG. GND
J50-4
J50-3
R434 0.3Ω
C435 47μF
R427 10K
R208 100
R209 100
DS104 DS3 DS103
DS108
FILAMENT SUPPLY
Q432
H
CR429
CR432
L432 130μH
C432 1.0μF
C312 .001
CR203
R108 10K
CR312
C215 .0047
C214 .01
C213 25
R212A 60M
R321 220K
R212B 228K
C222 1.0μF
R221 10
R322 820K
R323 820K
R223 499K
H.V. ADJ.
R224 50K
CR103
TP102
R106 100K
H.V. SUPPLY
R433 0.3Ω
J60
R430 100
R429 2.7K
Q429
R428 1.2K
REGULATOR OSCILLATOR
R109 1K
R18 1.2M
C12 .0047μF
R6 1K
R5 1K
CR4
CONTROL GRID SUPPLY
CR20
DS4
DS1
DS2
R104 3.9M
R432 2.7K
Q433
+20V (UNREG)
R331 1.5K
R330 220
Q329
CR328
R329 2.2K
Q328
R324 100K
C427 .001
CR327
R326 8.2K
R435 2.7Ω
C325 .001
R21 2K
CR121
C110 .0047
(-6) +175V
HARD COPY INTENSITY
R1050 50K
J52-2
J52-1
R132 57.6K
Q231
R236 10K
C232 .01
R235 32.4K
R237 2.7K
R133 22K
CR22
R229 10
C228 .01
L27 2.5μH
R30 15K
R135 100
R131 1K
BIAS
R129 50K
R25 10Ω
C25 0.1
R128 30.9K
CR24
H.V. GND
CR23
C23 0.1
R26 10K
FOCUS
INTENSITY CONTROL
(-5) COPYEN-1
R436 4.7K
Q539
J50
CHASSIS GND
C136 0.1
R126 1K
R228 1K
CR21
R227 680
Q123
Q122
R123 100Ω
CR122
R121 100
R122 33K
R332 220
C334 1μF
Z SIGNAL AMPLIFIER
DS18
Z MPX-O (-5)
R334 300
C333 470
R333 470
R336 1K
R335 10
C650 1μF
+5V
J54-9
+15V
J54-4
R439 10Ω
C439 0.1μF
-12V
J54-3
R438 10Ω
C437 0.1μF
+320V
J51-1
R339 47
C158 0.1μF
+150V ANODE 2 (-6)
VI
HIGH VOLTAGE & Z AXIS
672-0546-05
4-7
4051
@

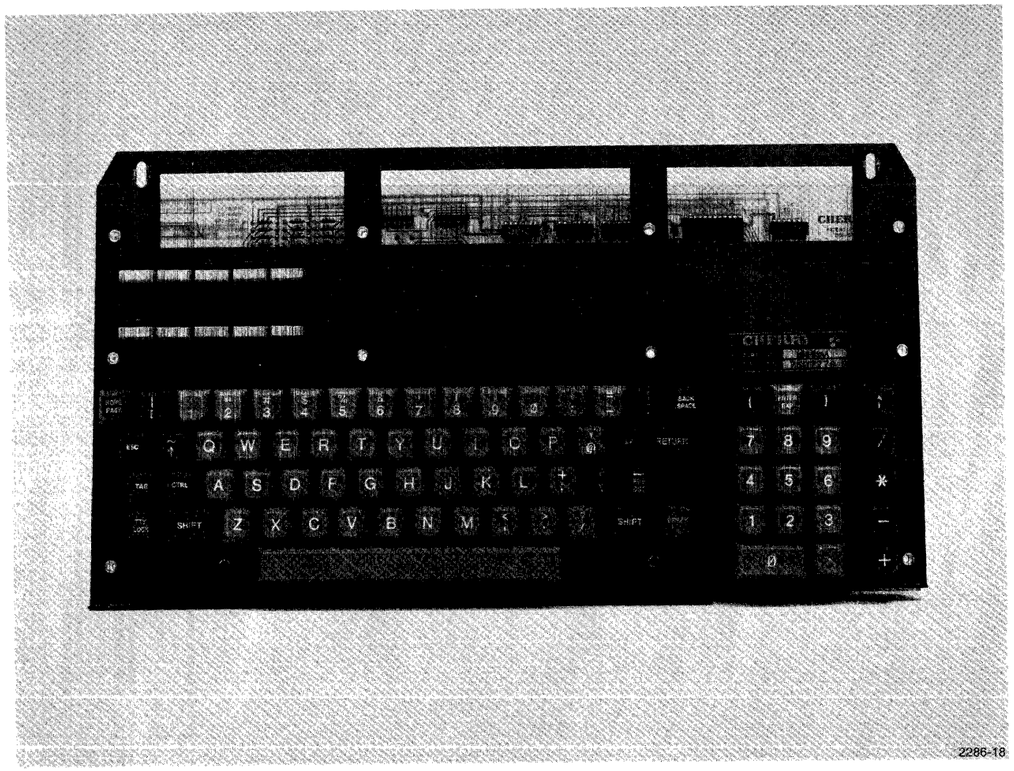

Keyboard 670-4002-00.

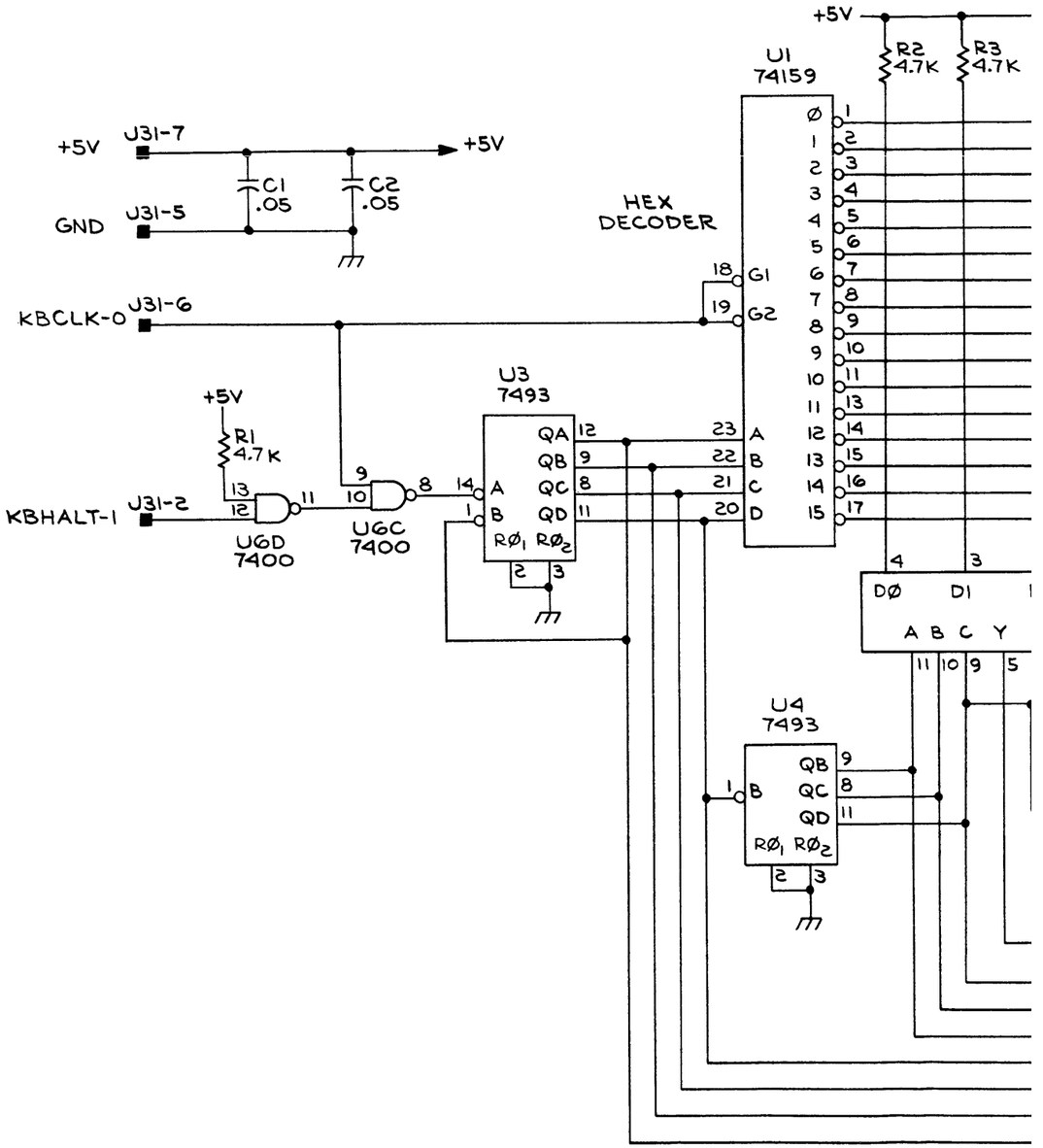

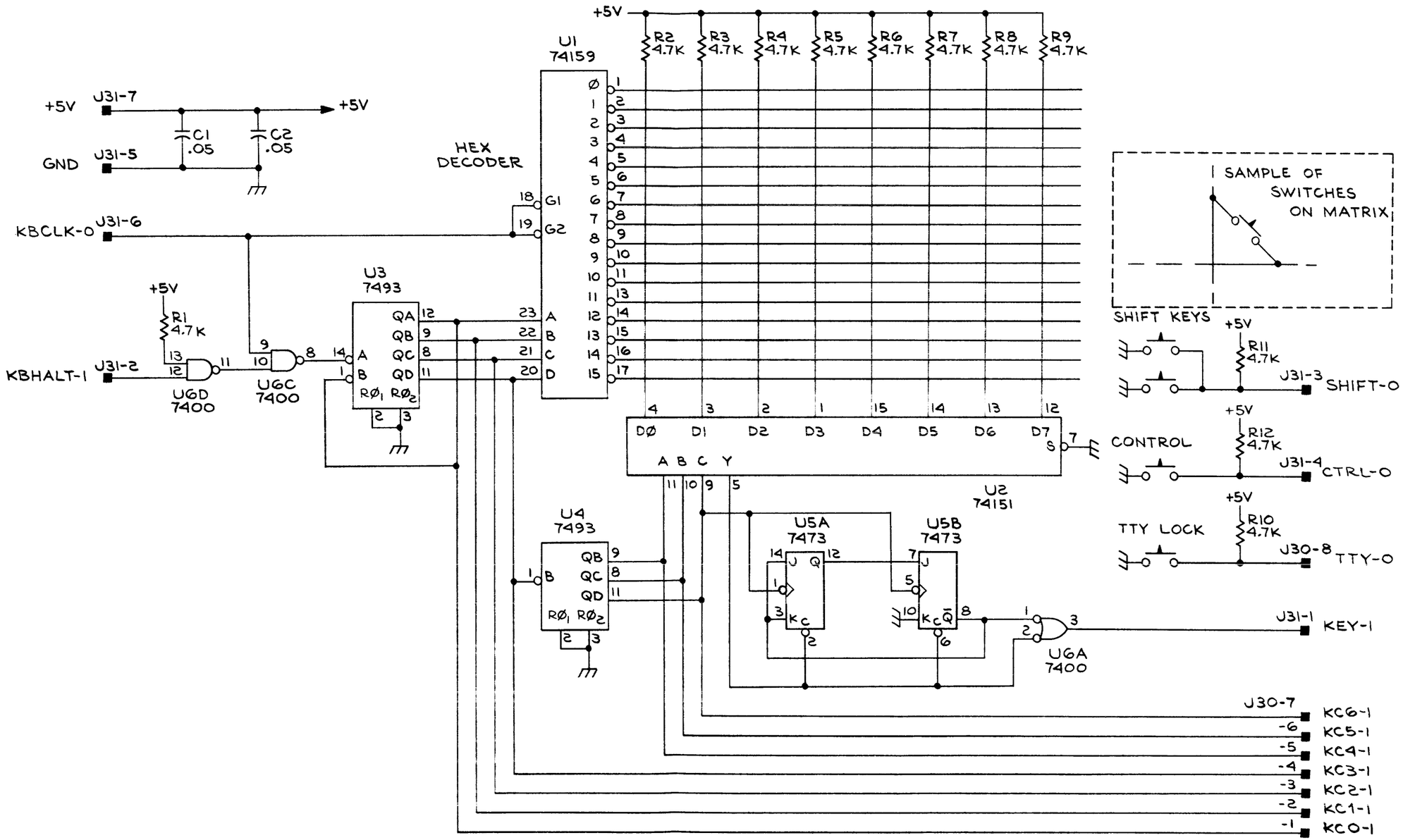

INSTRUMENT: 4051	670-4002-00	BOARD: KEYBOARD	PAGE: 5-1
		DIAGRAM: KEYBOARD	

@

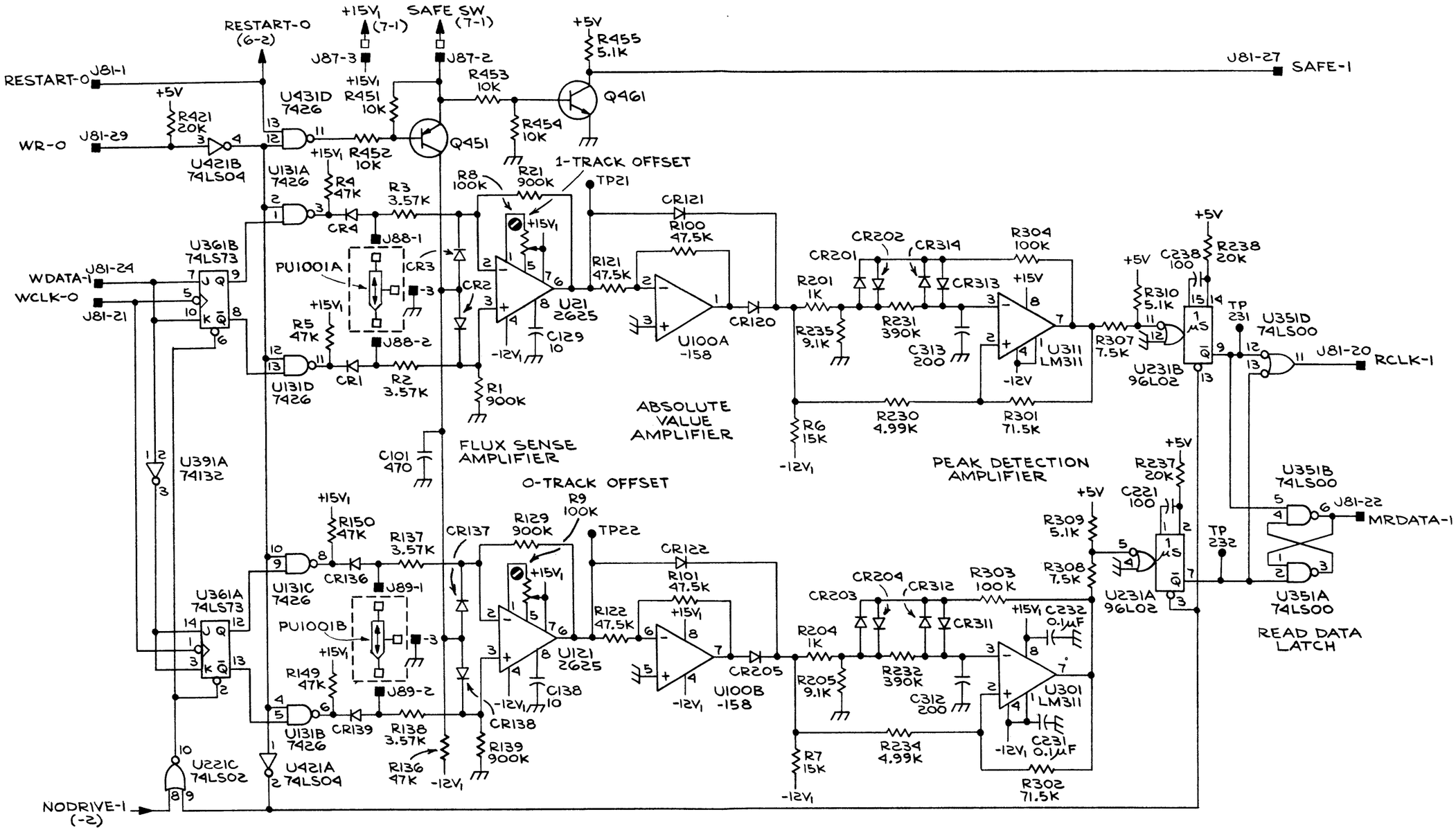

INSTRUMENT:		BOARD: TAPE DRIVE BOARD	PAGE:
4051		DIAGRAM: HEAD AMPLIFIER	6-1

@

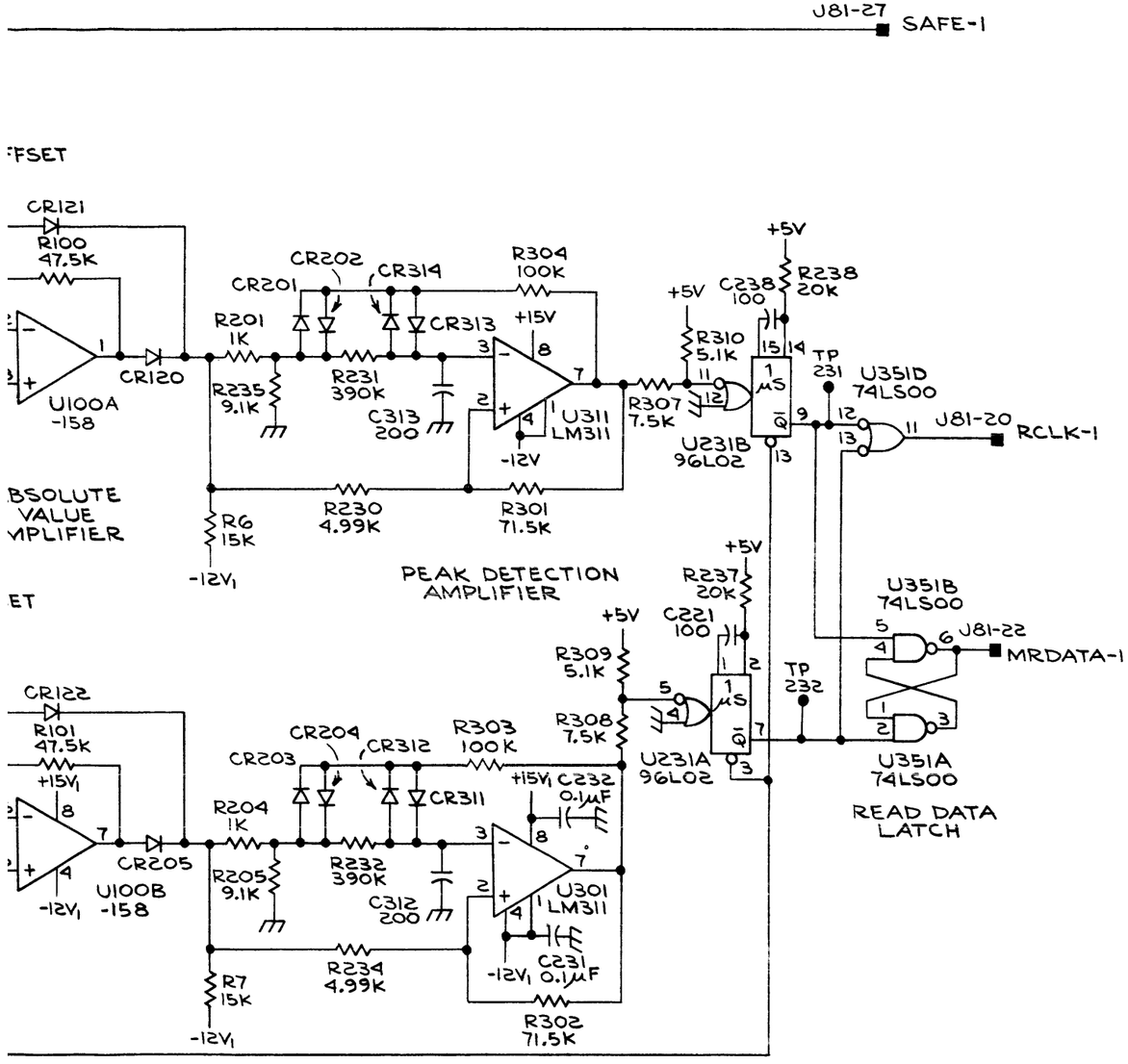

	BOARD: TAPE DRIVE BOARD	PAGE: 6-1
	DIAGRAM: HEAD AMPLIFIER	

@

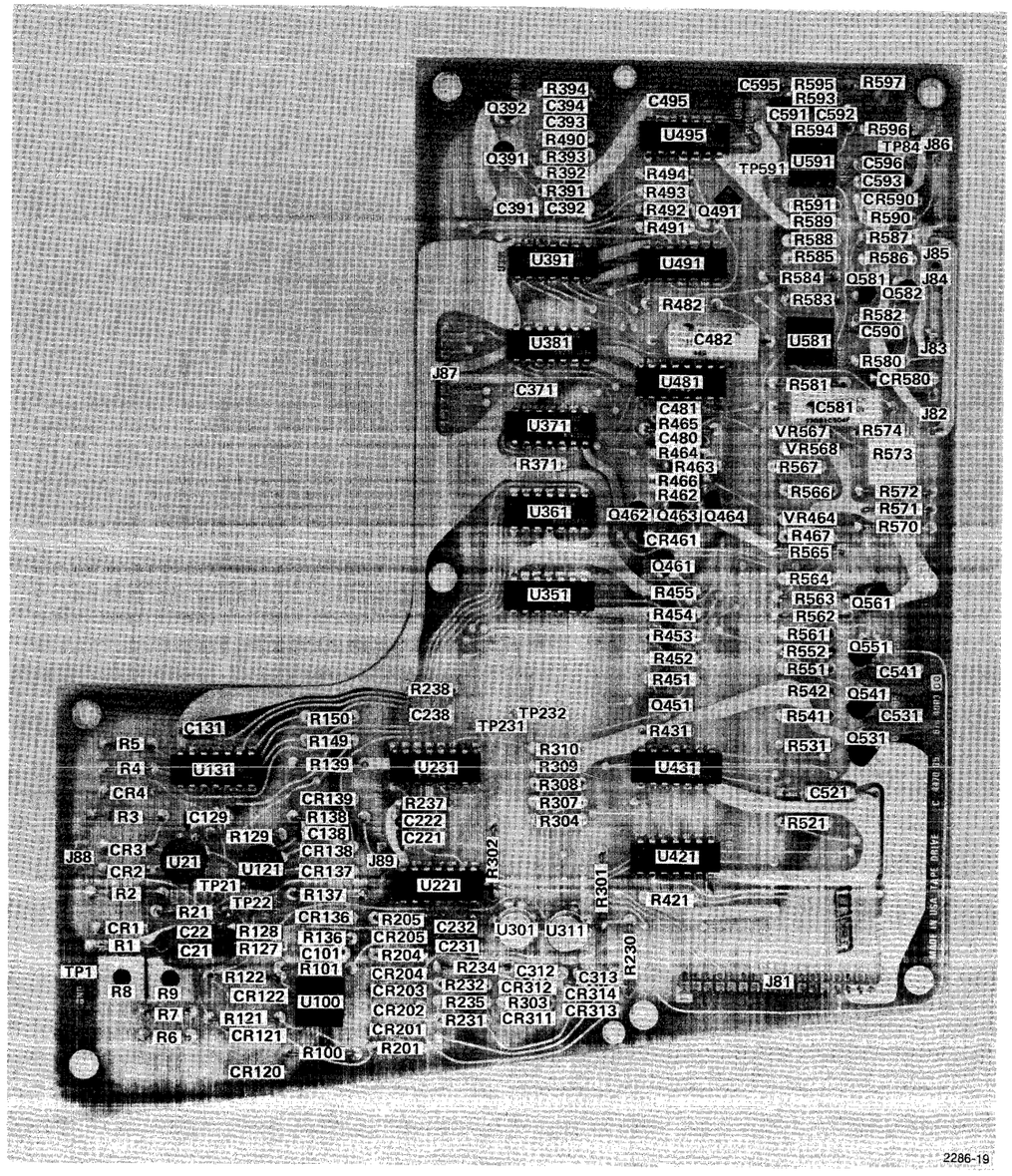

Tape Drive board 670-4003-00.

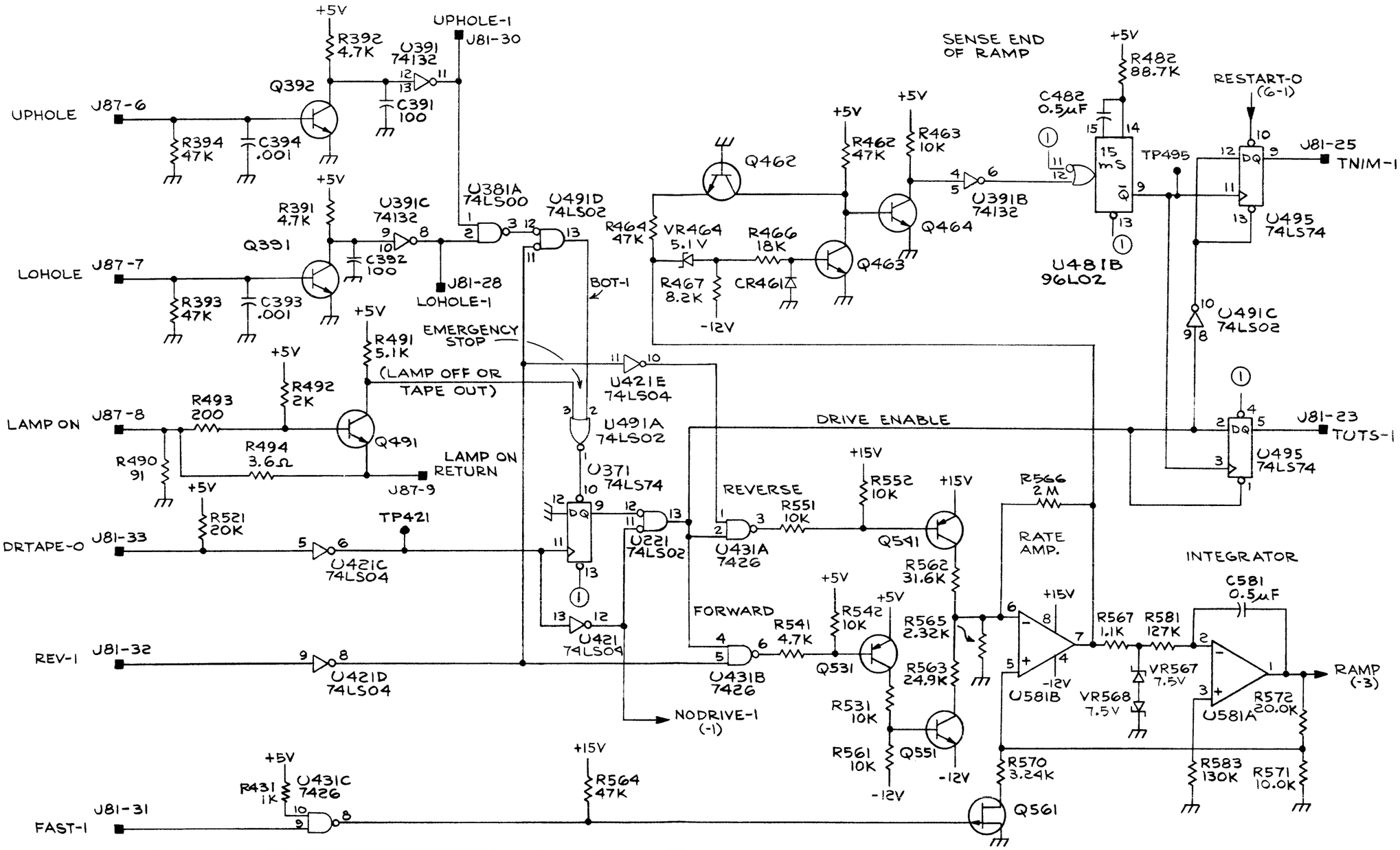

INSTRUMENT: 4051	+5V — R371 1K — ①	BOARD: TAPE DRIVE BOARD	PAGE: 6-2
		DIAGRAM: MOTOR CONTROL	

@

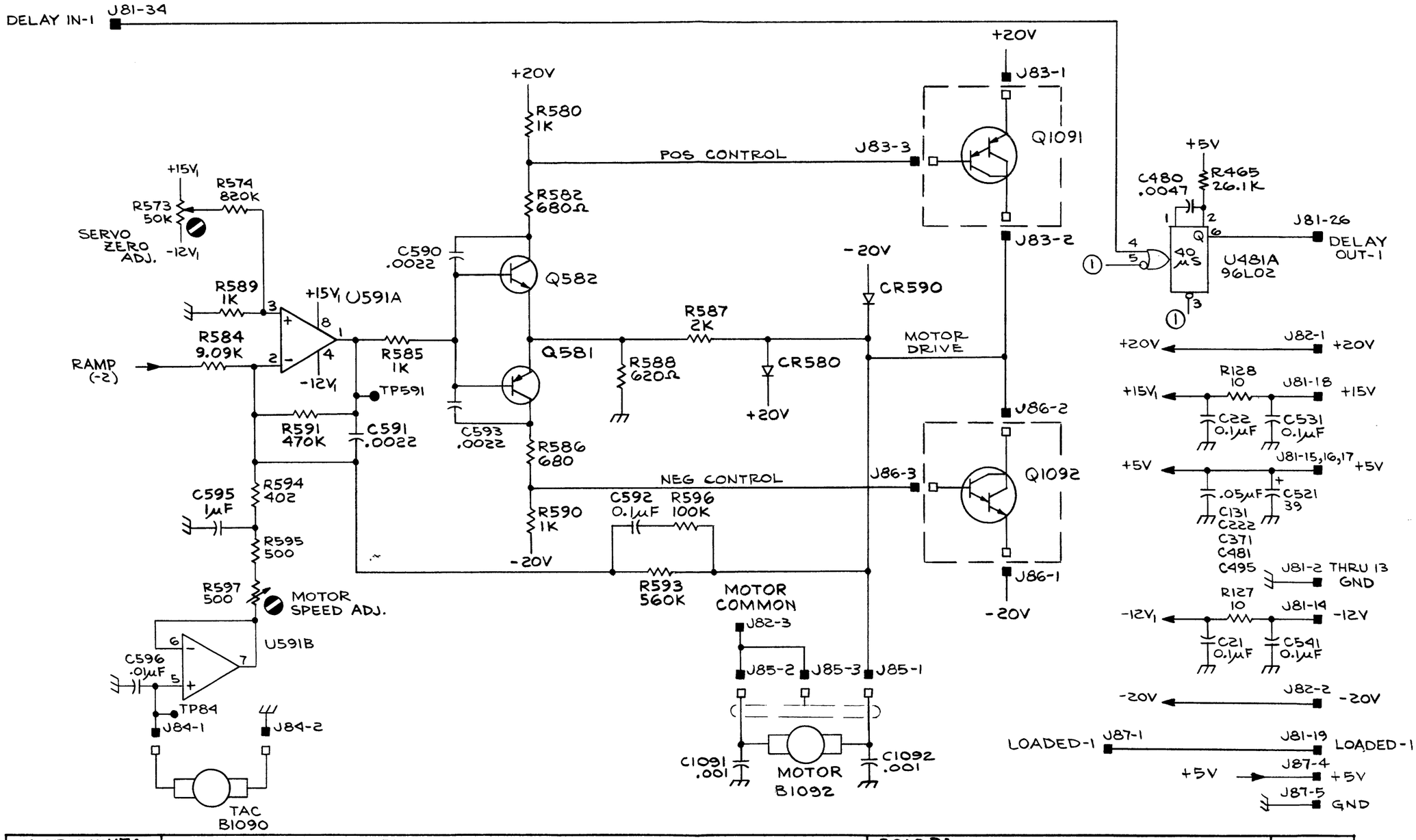

INSTRUMENT:		BOARD:	PAGE:
4051		TAPE DRIVE BOARD	6-3
		DIAGRAM: MOTOR DRIVE	

@

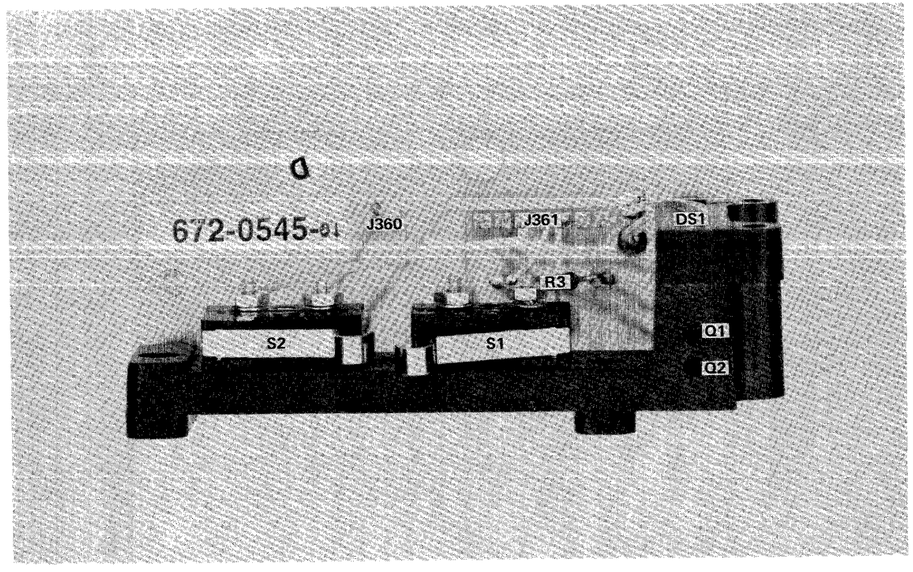

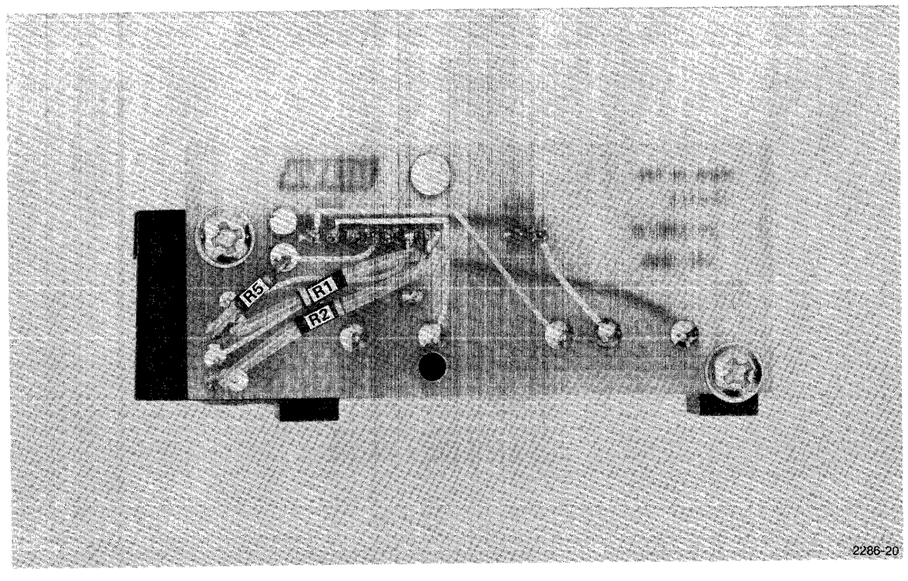

Tape Status board 672-0545-01.

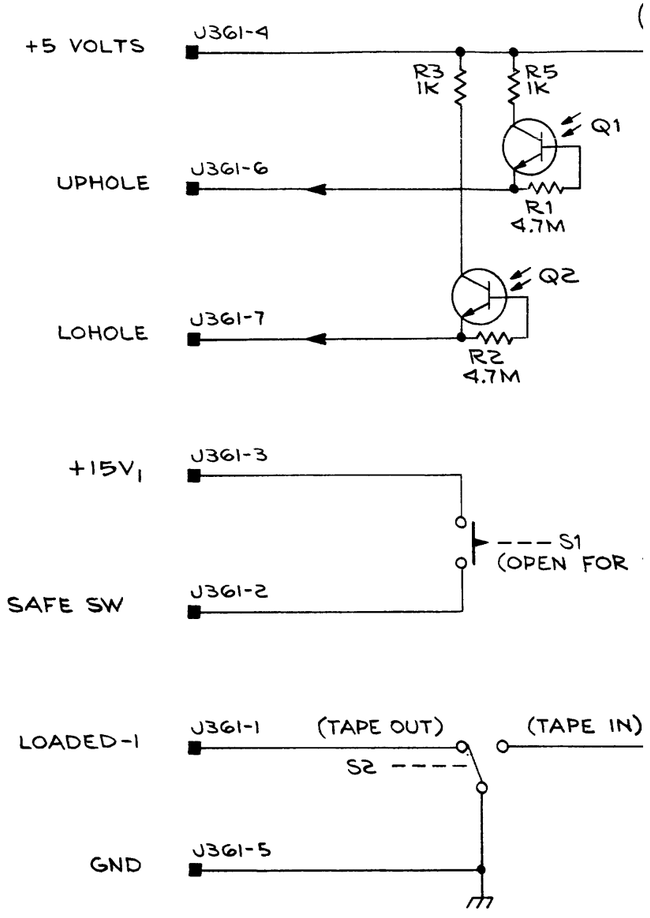

INSTRUMENT:	
4051	

@

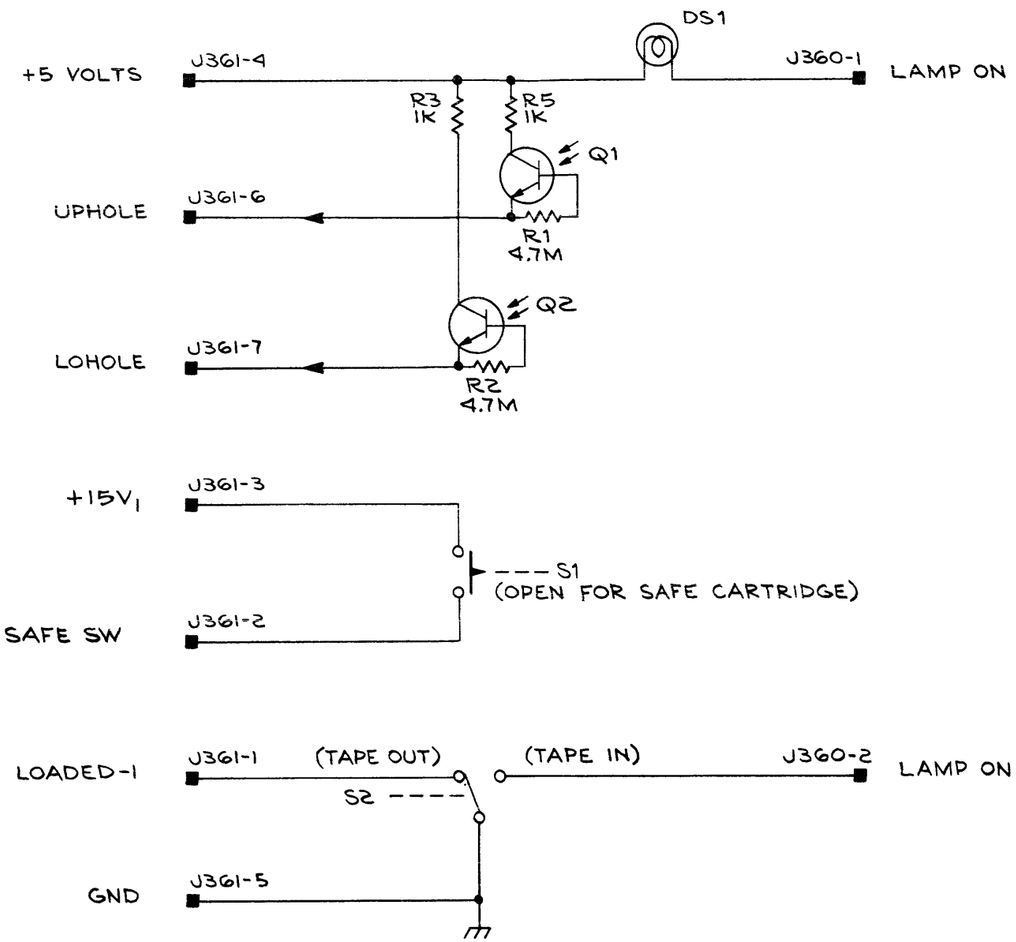

INSTRUMENT: 4051		BOARD: TAPE STATUS	PAGE: 7-1
		DIAGRAM: TAPE STATUS	

2286-20

@

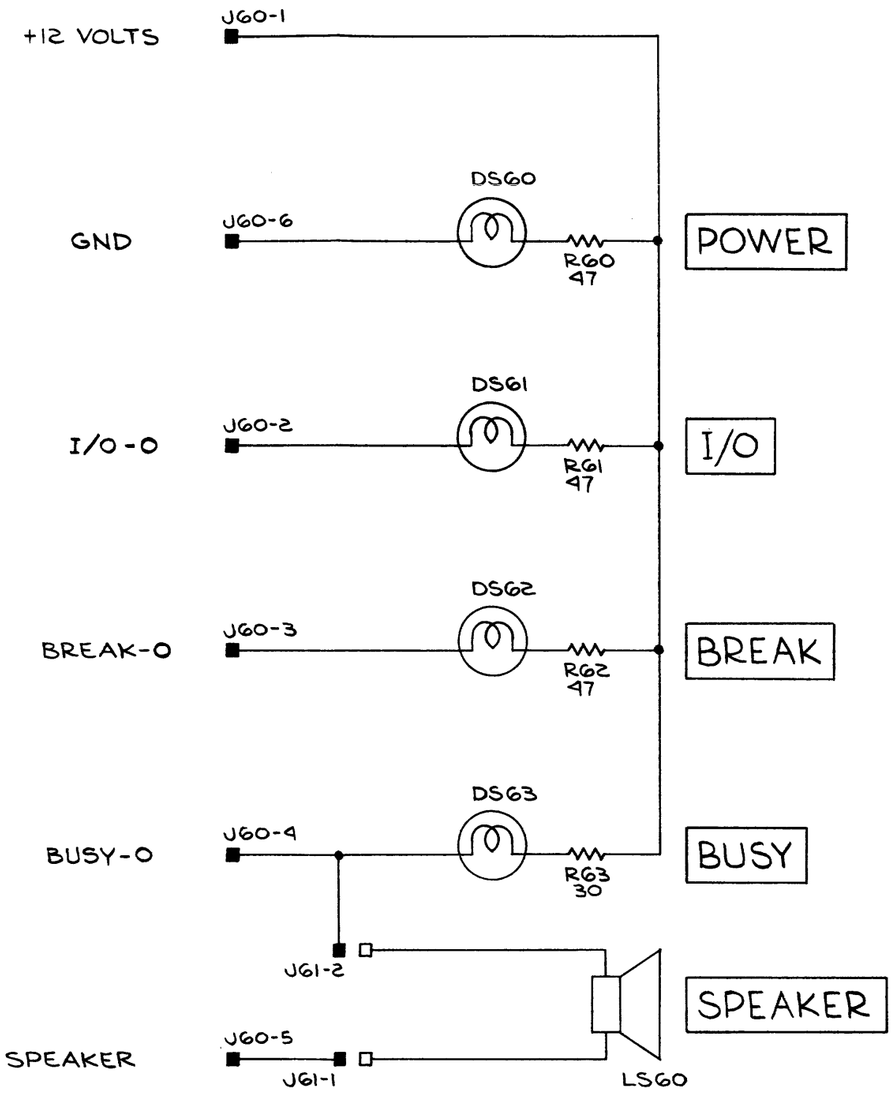

INSTRUMENT: 4051		BOARD: INDICATOR LIGHTS	PAGE: 8-1
		DIAGRAM: INDICATOR LIGHTS	

@

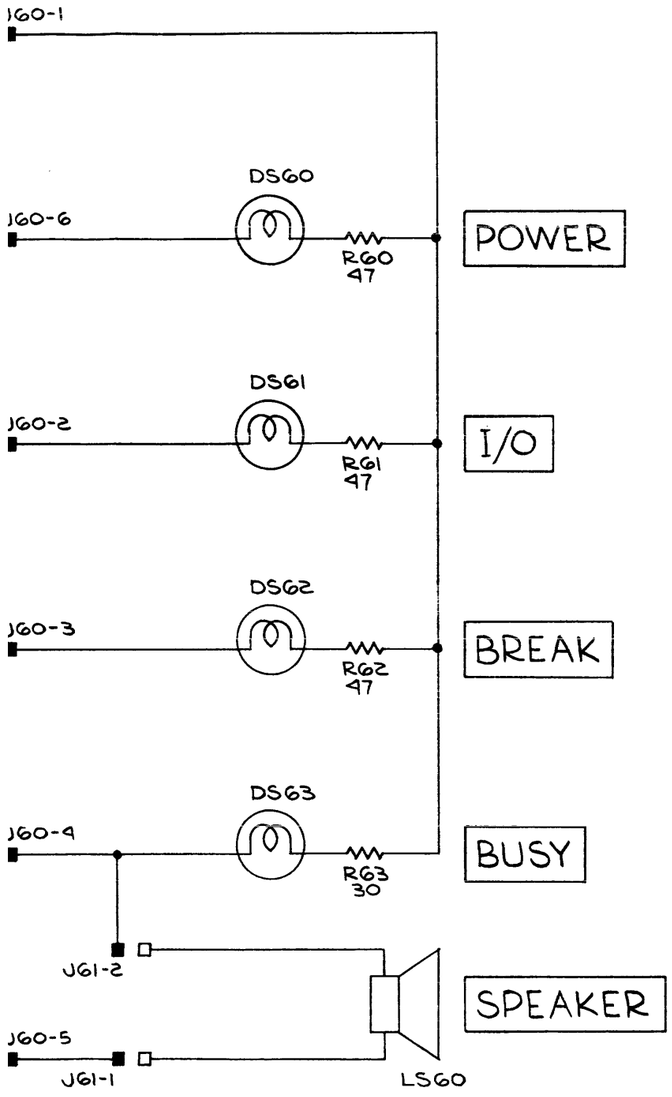

	BOARD: INDICATOR LIGHTS	PAGE: 8-1
	DIAGRAM: INDICATOR LIGHTS	

@

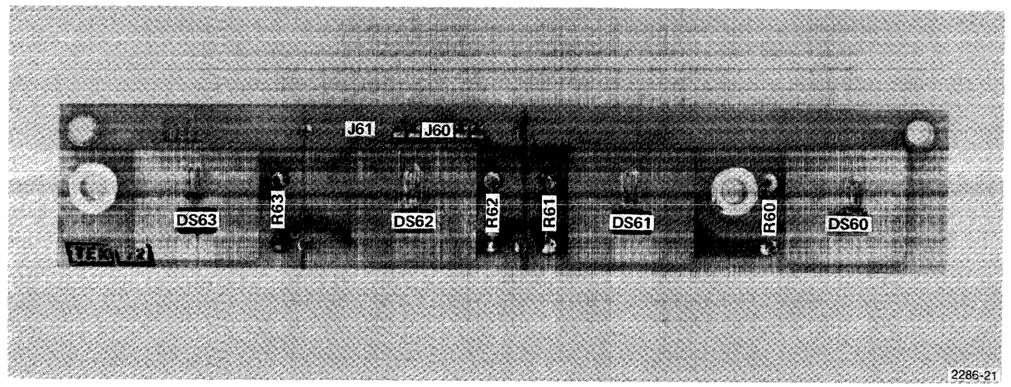

Indicator Lights board 670-4029-00.

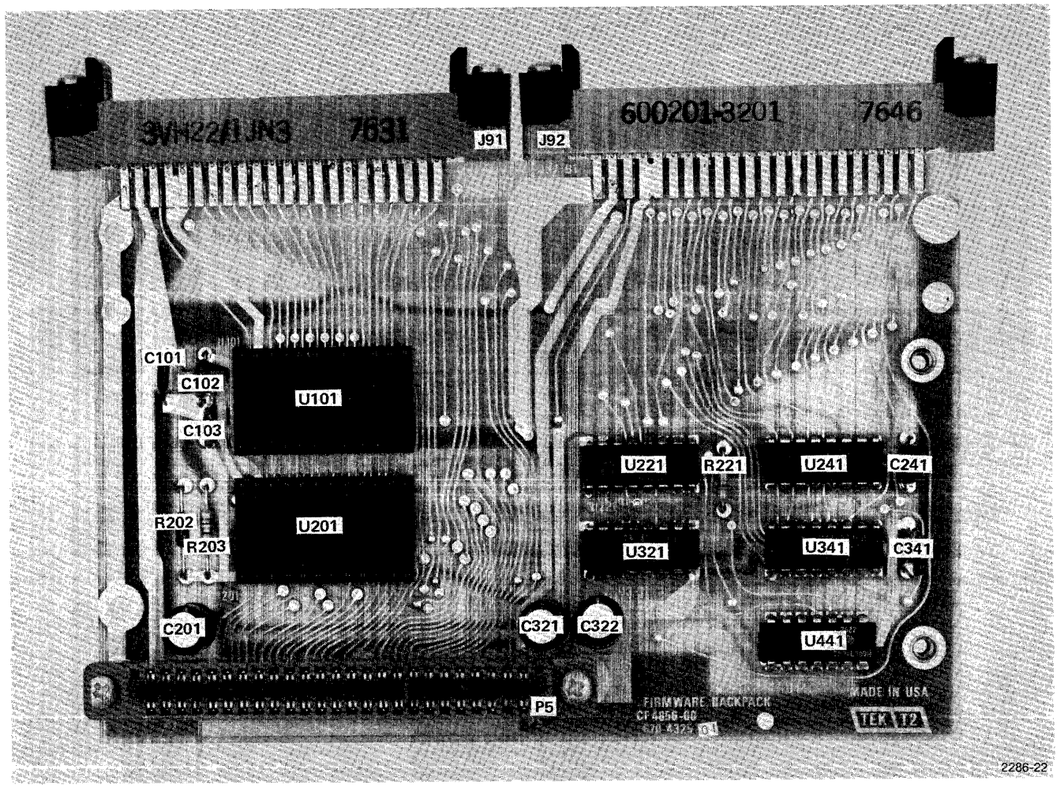

Firmware Backpack 670-4325-01.

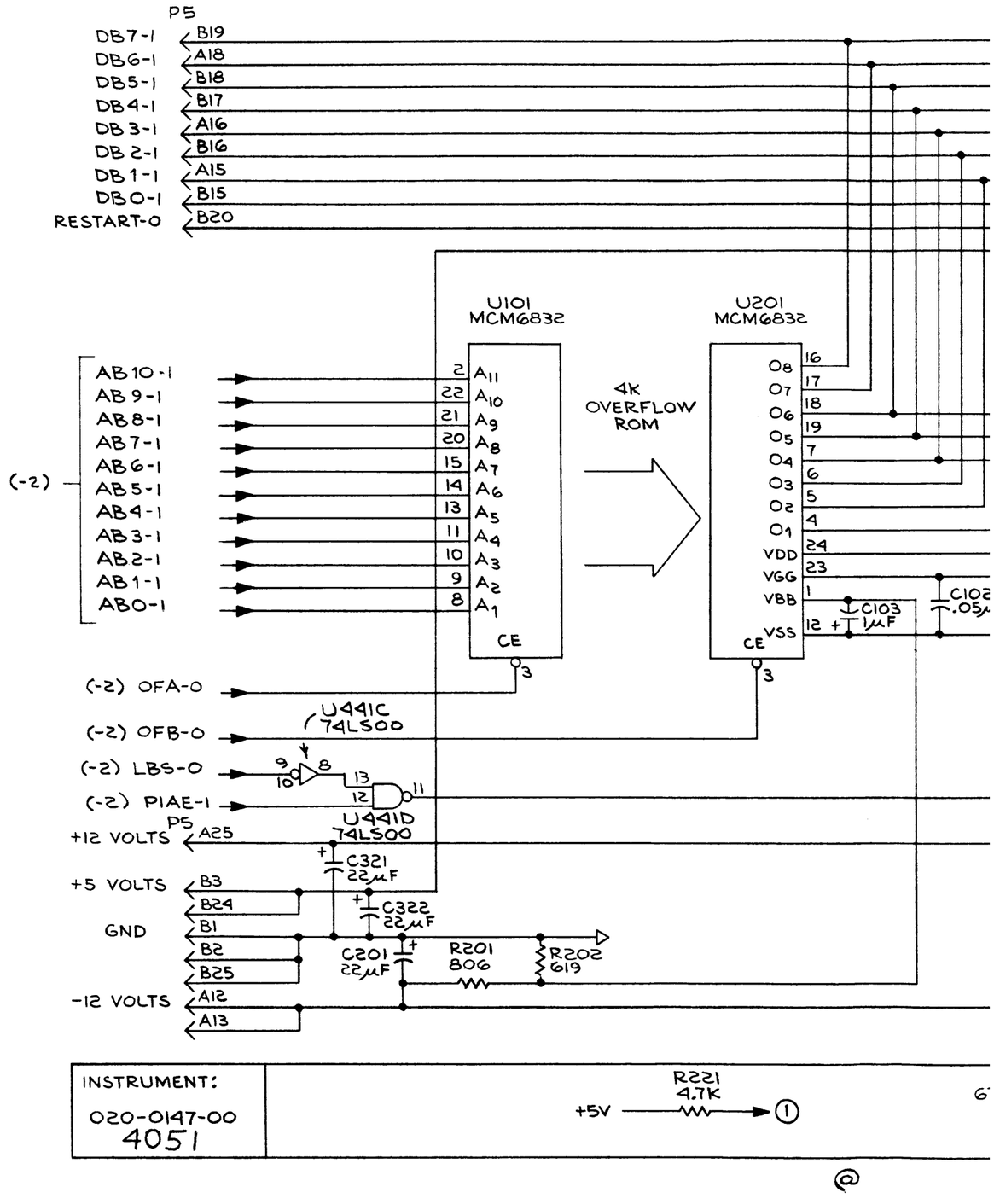

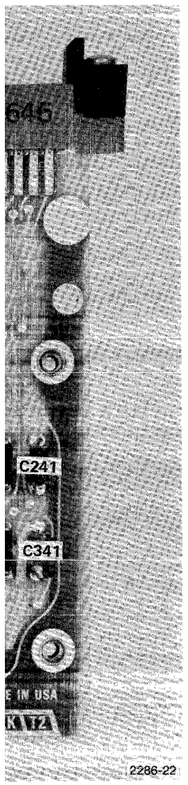

P5

DB7-1 B19
DB6-1 A18
DB5-1 B18
DB4-1 B17
DB3-1 A16
DB2-1 B16
DB1-1 A15
DB0-1 B15
RESTART-0 B20

J91/92-

B17 DB7-1
B15 DB6-1
B13 DB5-1
B11 DB4-1
B12 DB3-1
B10 DB2-1
B8 DB1-1
B6 DB0-1
A11 RESTART-0
A2 +5 VOLTS
B2 +5 VOLTS

U101 MCM6832

AB10-1 2 A11
AB9-1 22 A10
AB8-1 21 A9
AB7-1 20 A8
(-2) AB6-1 15 A7
AB5-1 14 A6
AB4-1 13 A5
AB3-1 11 A4
AB2-1 10 A3
AB1-1 9 A2
AB0-1 8 A1
CE 3

4K OVERFLOW ROM

U201 MCM6832

O8 16
O7 17
O6 18
O5 19
O4 7
O3 6
O2 5
O1 4
VDD 24
VGG 23
VBB 1
VSS 12
CE 3

C103 1μF
C102 .05μF
C101 .05μF
C241 .05μF
C341 .05μF

BANK SWITCH REGISTER

① C 1
4 DA QA 2
13 DB QB 15
5 DC QC 7
9

U221 74LS175

U241 74LS138

① 6 G1 Y0 15
4 G2A Y1 14
5 G2B Y4 11
Y5 10
Y6
Y7
7 9

BANK SWITCH DATA DECODER

U441A 74LS00

P5-A14 RBC-1

BSOFL-0 (-2)
J91-A22 BS(L)-0
J92-A22 BS(R)-0
J91-A20 BSX(L)-0
J92-A20 BSX(R)-0

J91/92-
A1 GND
B1

(-2) OFA-0
(-2) OFB-0
(-2) LBS-0
(-2) PIAE-1

U441C 74LS00
U441D 74LS00

+12 VOLTS P5 A25

J91/92
B4
B5
+12 VOLTS

+5 VOLTS B3
B24
GND B1
B2
B25
-12 VOLTS A12
A13

C321 22μF
C322 22μF
C201 22μF
R201 806
R202 619

J91/92
A3
A4
-12 VOLTS

R221 4.7K
+5V ①

INSTRUMENT: 020-0147-00 4051	670-4325-01	BOARD: FIRMWARE BACKPACK	PAGE: 9-1a
		DIAGRAM: ROM	

@

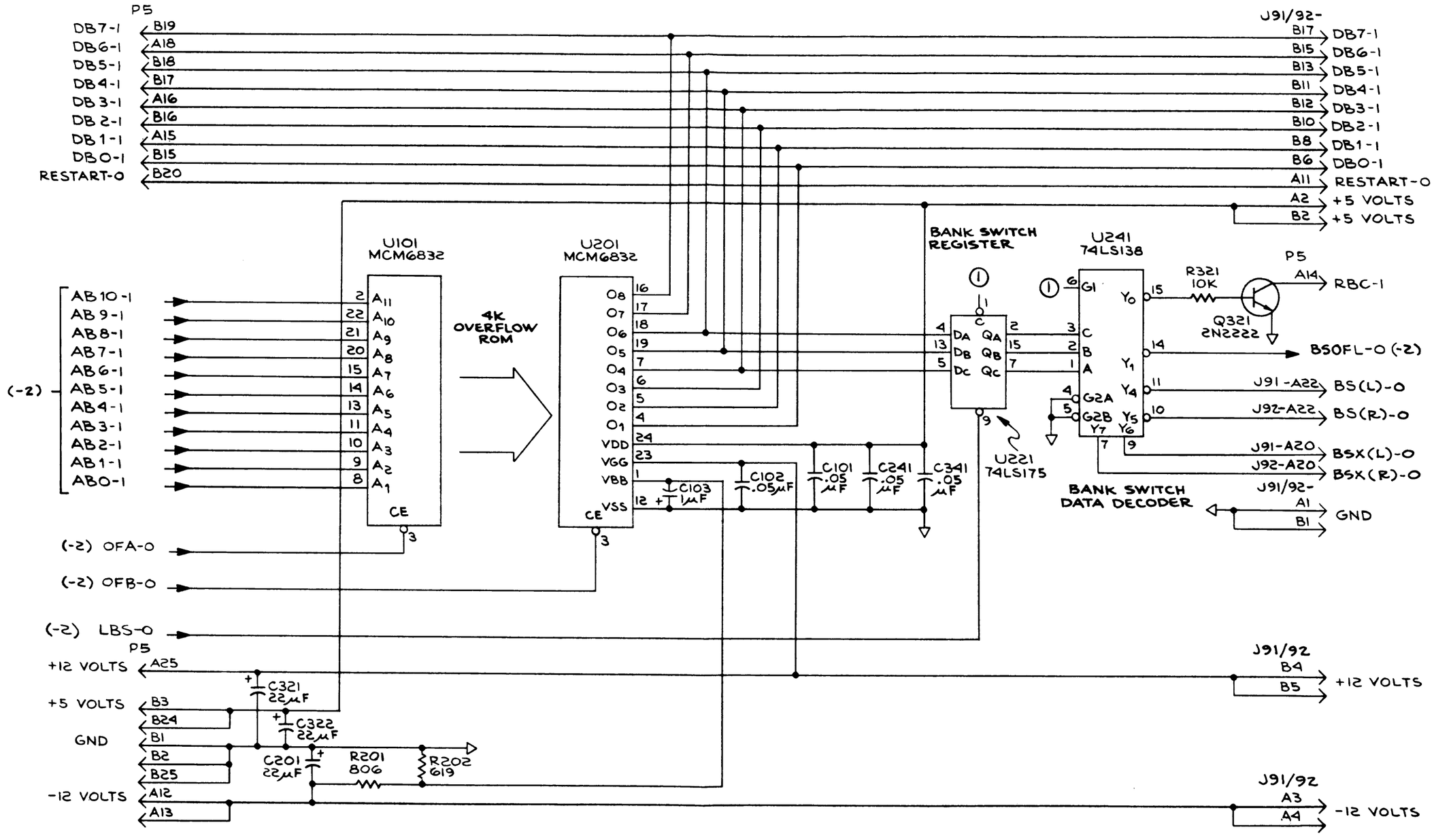

INSTRUMENT: 020-0147-00 4051	670-4325-00	BOARD: FIRMWARE BACKPACK	PAGE: 9-1b
		DIAGRAM: ROM	

@

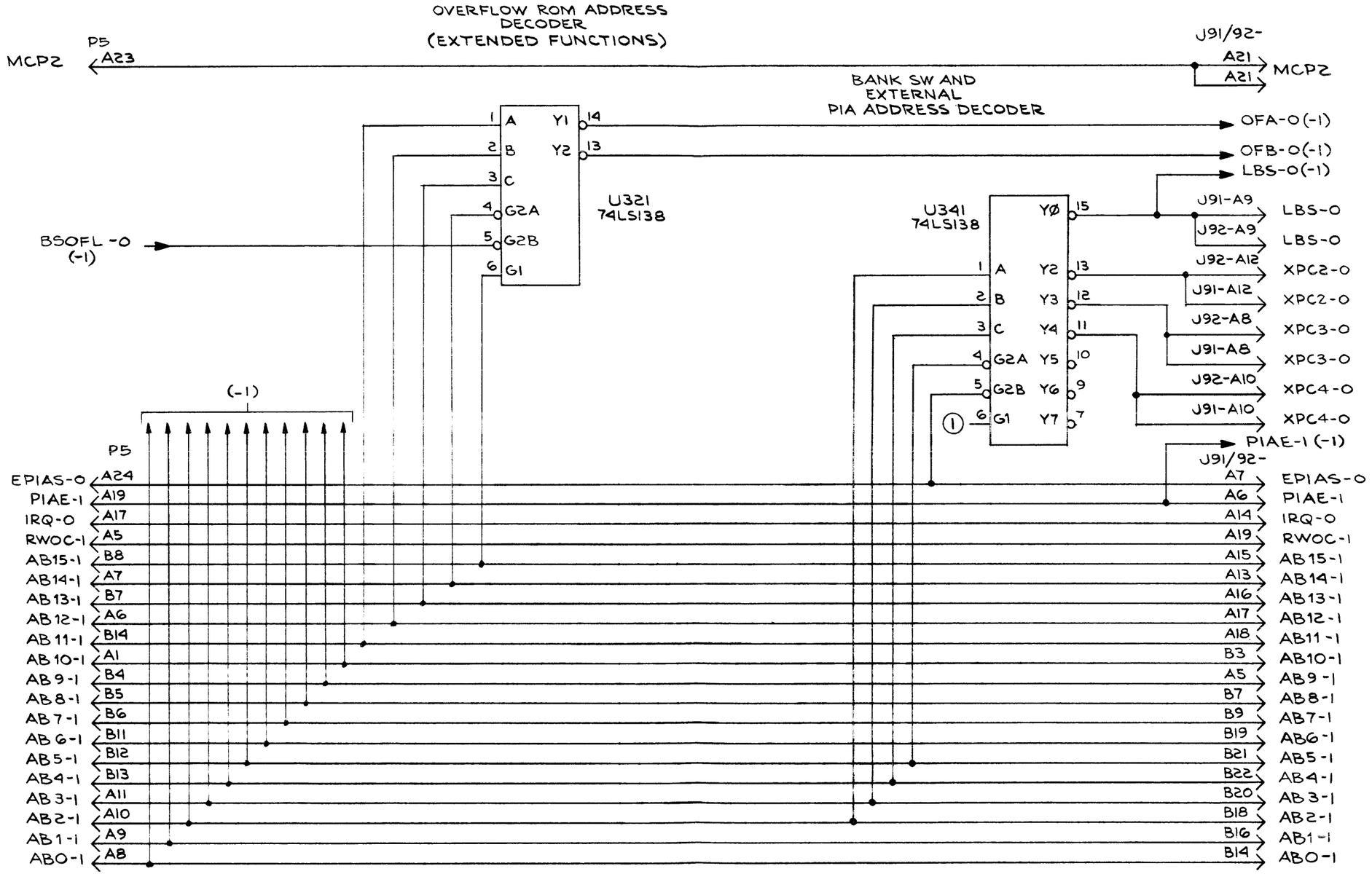

INSTRUMENT: 020-0147-00 4051	670-4325-01	BOARD: FIRMWARE BACKPACK	PAGE: 9-2a
		DIAGRAM: ROM PACK SELECT	

@

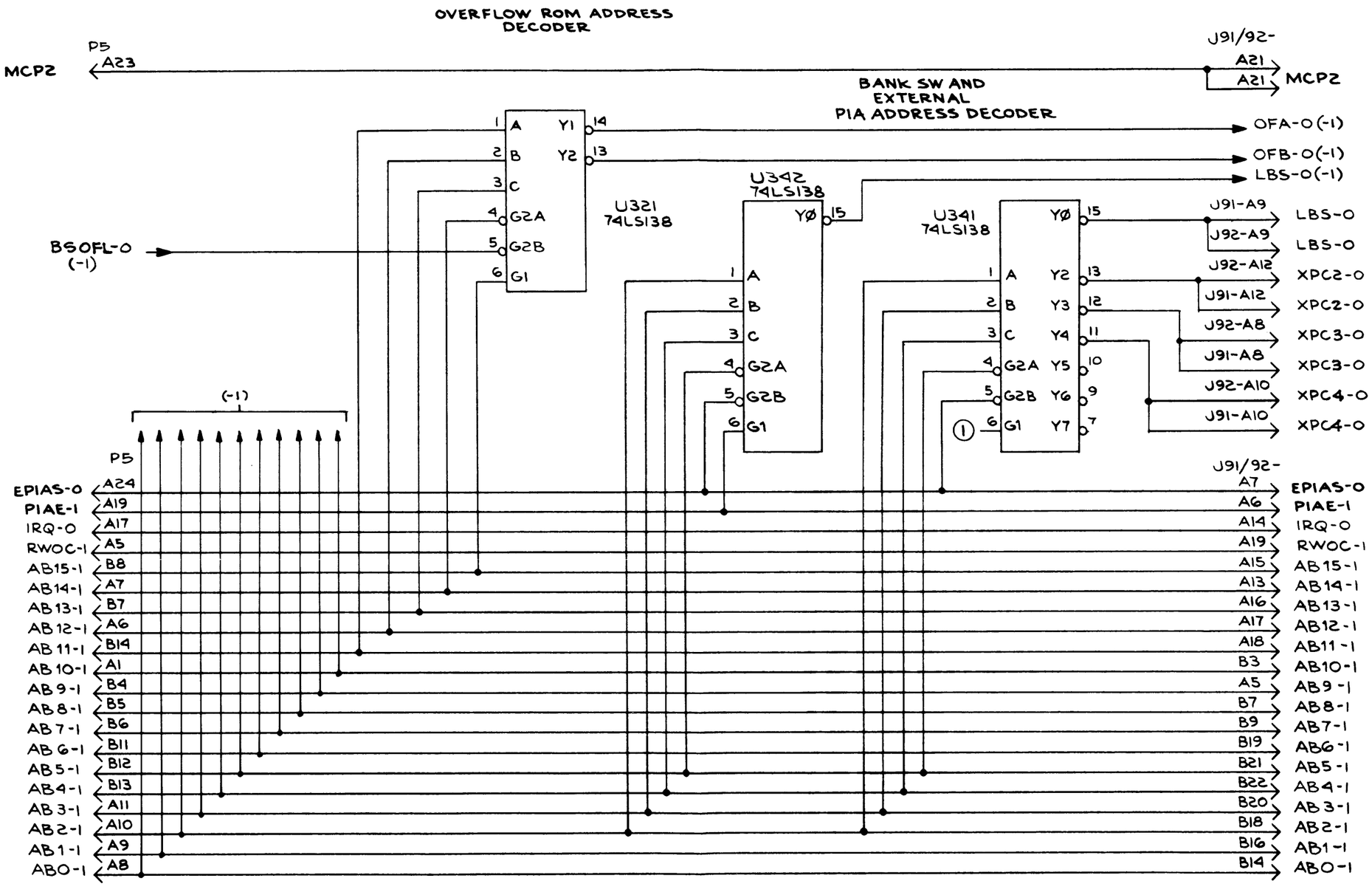

INSTRUMENT: 020-0147-00 4051	R221 4.7K +5V → ①	670-4325-00	BOARD: FIRMWARE BACKPACK DIAGRAM: ROM PACK SELECT	PAGE: 9-2b

@

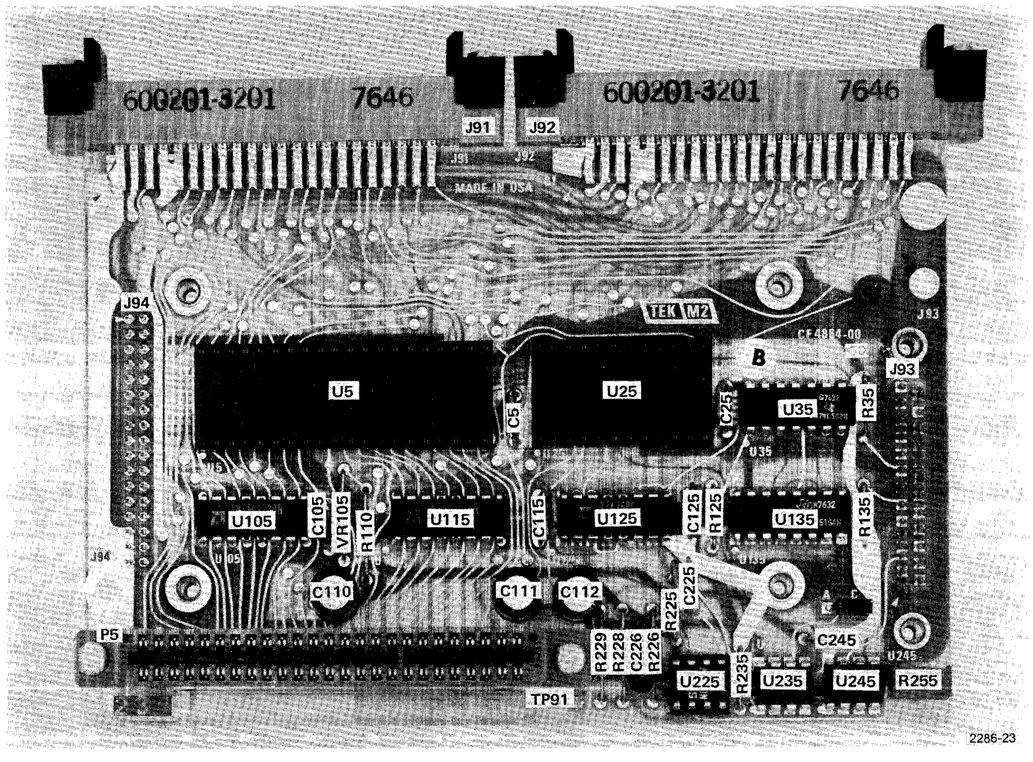

Communication Interface board 670-4331-00.

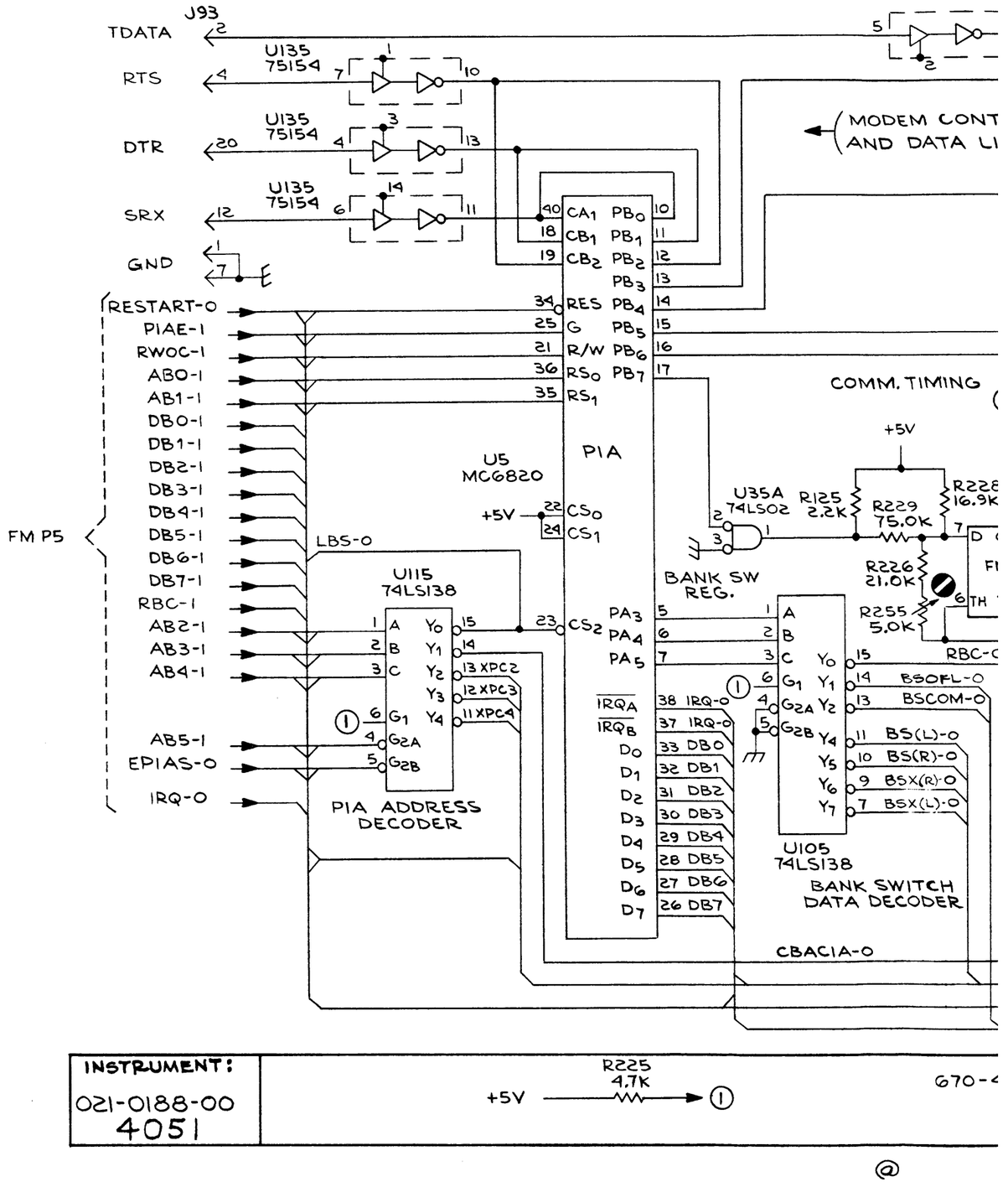

J93
TDATA 2
RTS 4
DTR 20
SRX 12
GND 1, 7

U135 75154 (1, 7, 10)
U135 75154 (3, 4, 13)
U135 75154 (14, 6, 11)
U135 75154 (5, 12, 2)

MODEM CONTROL AND DATA LINES

U245 75150 (1, 3)
U235 75150 (1, 3)
U245 75150 (1, 3)
+12V, R135 4.7K, R35 4.7K, -12V

J93
6 DSR
5 CTS
8 DCD
11 STXA
A
C
19 STXC
3 RDATA

U125 93L16
A B C D
G_P
G_T
Q_D
CLR LD

COMM. TIMING

+5V
R125 2.2K
R229 75.0K
R228 16.9K
R226 21.0K
R255 5.0K
C225 .022μF
R235 100
TP91
C226 560

U35A 74LS02
U35C 74LS02
U35B 74LS02
U225 NE555 (D, FM, TH, T)

BANK SW REG.
RBC-0
RBC-1

U5 MC6820 PIA
CA1 CA2 CB1 CB2
PB0 PB1 PB2 PB3 PB4 PB5 PB6 PB7
RES G R/W RS0 RS1
CS0 CS1 CS2
PA3 PA4 PA5
IRQA IRQB
D0 D1 D2 D3 D4 D5 D6 D7

RESTART-0
PIAE-1
RWOC-1
ABO-1
AB1-1
DB0-1
DB1-1
DB2-1
DB3-1
DB4-1
DB5-1
DB6-1
DB7-1
RBC-1
AB2-1
AB3-1
AB4-1
AB5-1
EPIAS-0
IRQ-0
FM P5
LBS-0
CBACIA-0

U115 74LS138 PIA ADDRESS DECODER
A B C G1 G2A G2B
Y0 Y1 Y2 Y3 Y4
XPC2 XPC3 XPC4

U105 74LS138 BANK SWITCH DATA DECODER
A B C G1 G2A G2B
Y0 Y1 Y2 Y4 Y5 Y6 Y7
IRQ-0 IRQ-0 DB0 DB1 DB2 DB3 DB4 DB5 DB6 DB7
BSOFL-0
BSCOM-0
BS(L)-0
BS(R)-0
BSX(R)-0
BSX(L)-0

U25 MC6850 ACIA
TXD RXD TX RX IRQ CTS DCD
CS0 CS1 CS2 G RS R/W
PIAE ABO RWOC

D0 D1 ÷1 D2 ÷16 D3 ÷64 D4 D5 D6 D7 IRQ
DB0-1
DB1-1
DB2-1
DB3-1
DB4-1
DB5-1
DB6-1
DB7-1
IRQ-0
RESTART-0 > TO J91 & J92
BS(L)-0
BS(R)-0
XPC2-0
XPC3-0
XPC4-0
EPIAS-0
PIAE-1
RWOC-1
ABO-1
AB1-1
AB2-1
AB3-1
AB4-1
AB5-1
BSX(L)-0
BSX(R)-0
LBS-0

DB0-1
DB1-1
DB2-1
DB3-1
DB4-1
DB5-1
DB6-1
DB7-1
BSCOM-0
BSOFL-0
TO J94

R225 4.7K +5V

INSTRUMENT: 021-0188-00 4051	670-4331-00	BOARD: COMMUNICATION BACKPACK	PAGE: 10-1
		DIAGRAM: CPU TO RS232	

@

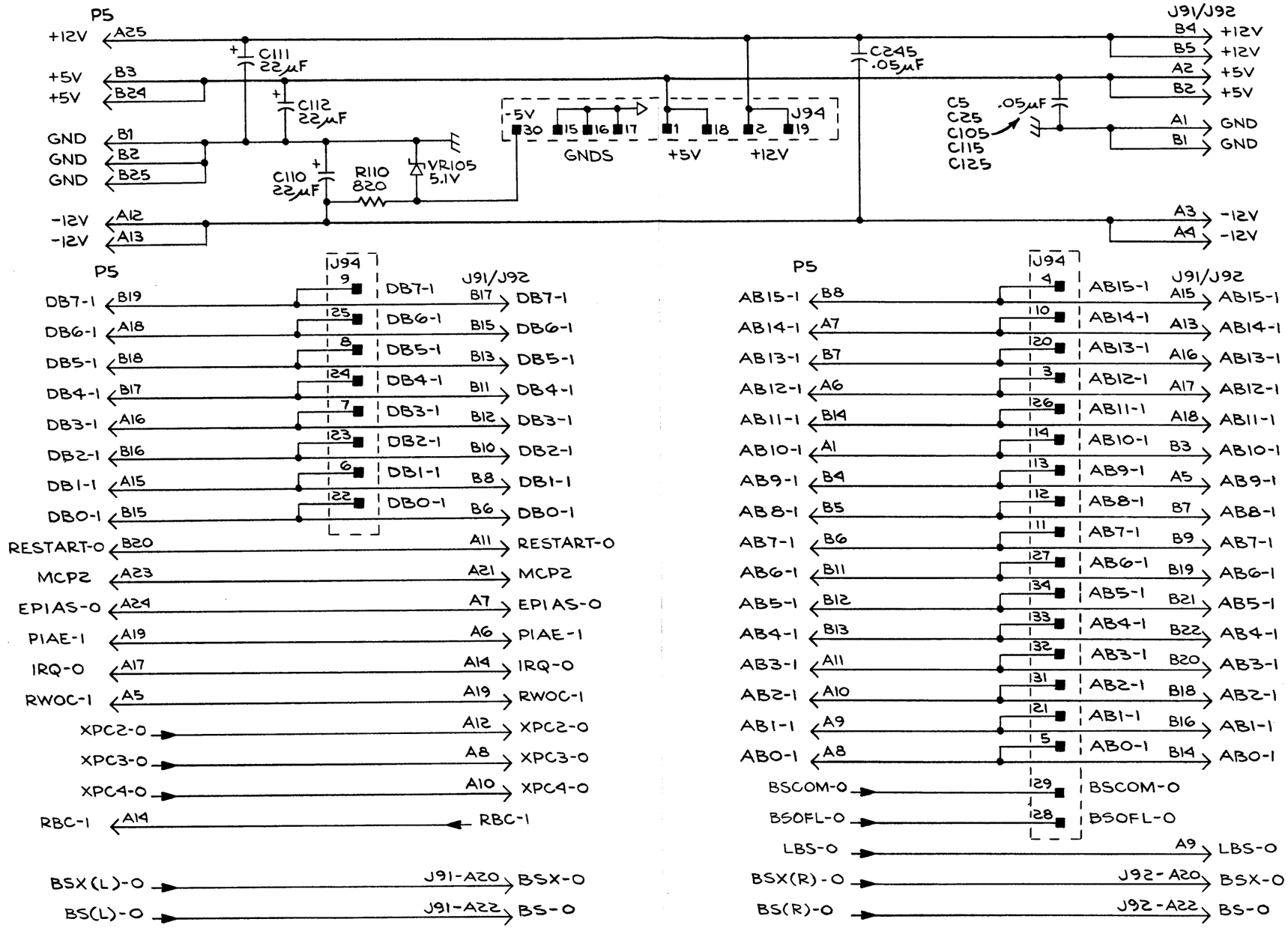

INSTRUMENT:			BOARD: COMMUNICATION BACKPACK	PAGE:
021-0188-00 4051		670-4331-00	DIAGRAM: POWER & ROM PACK DISTRIBUTION	10-2

@

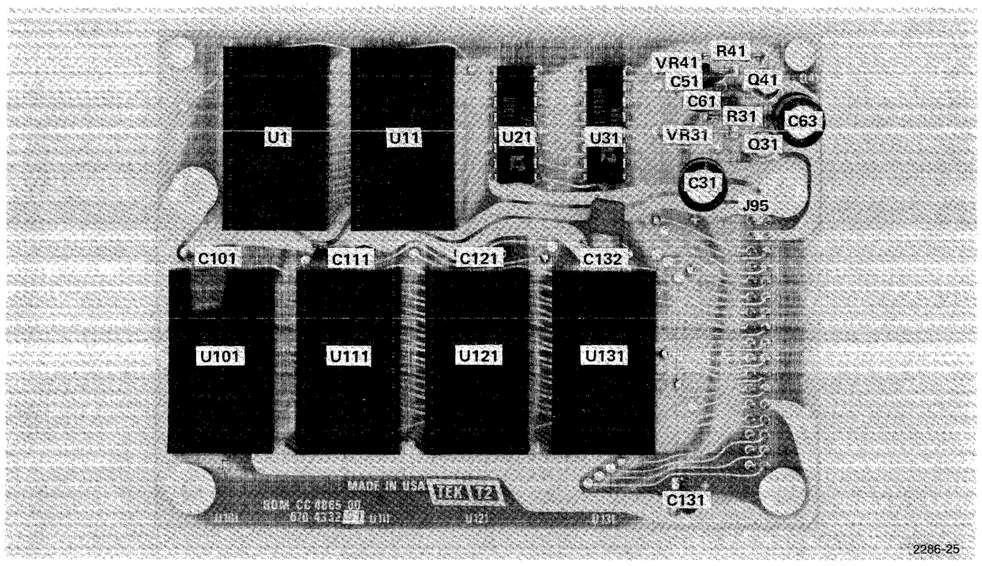

Communication ROM board 670-4332-01.

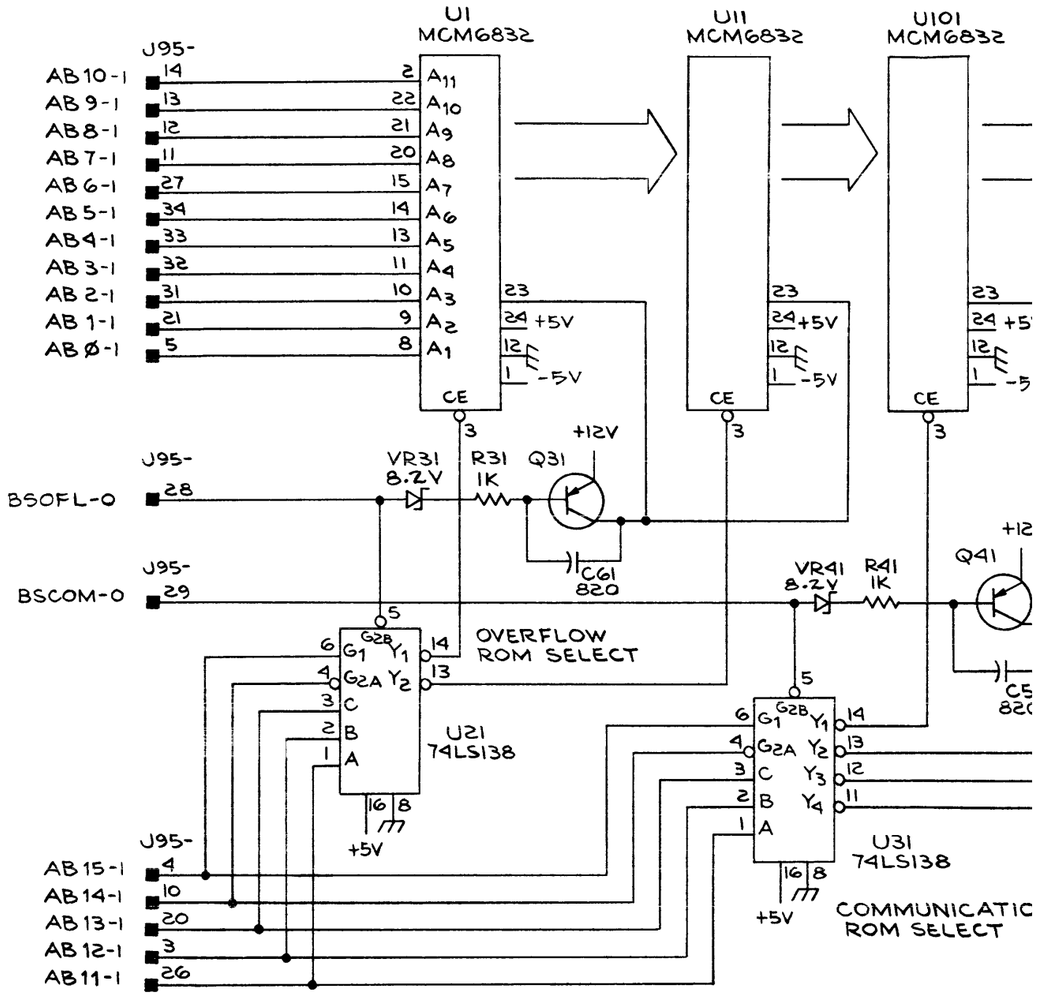

INSTRUMENT:
021-0188-00 4051

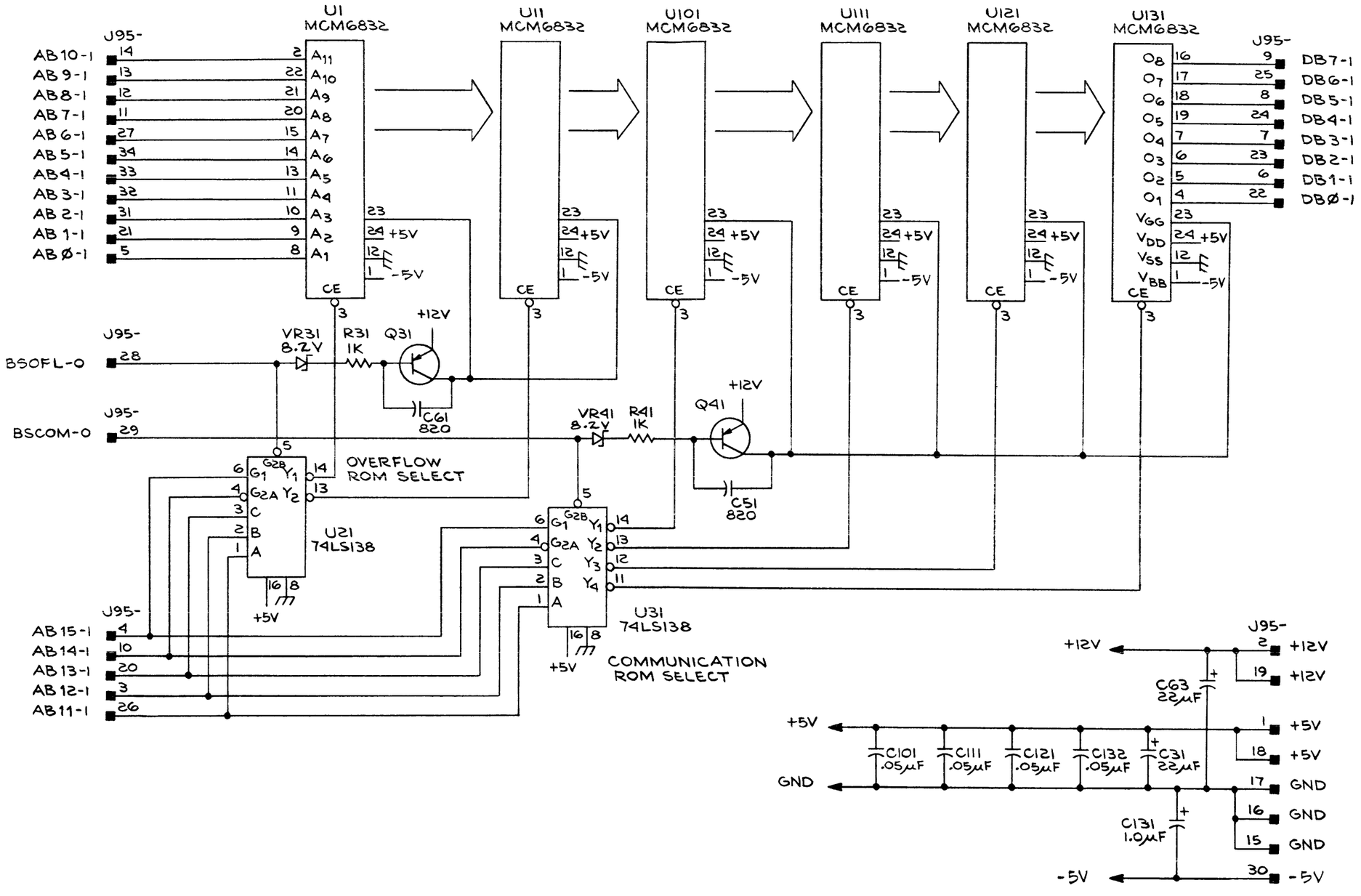

INSTRUMENT:		BOARD:	PAGE:
021-0188-00 4051	670-4332-00	COMMUNICATION ROM BOARD DIAGRAM:	11-1

2286-25

REPLACEABLE ELECTRICAL PARTS

PARTS ORDERING INFORMATION

Replacement parts are available from or through your local Tektronix, Inc. Field Office or representative.

Changes to Tektronix instruments are sometimes made to accommodate improved components as they become available, and to give you the benefit of the latest circuit improvements developed in our engineering department. It is therefore important, when ordering parts, to include the following information in your order: Part number, instrument type or number, serial number, and modification number if applicable.

If a part you have ordered has been replaced with a new or improved part, your local Tektronix, Inc. Field Office or representative will contact you concerning any change in part number.

Change information, if any, is located at the rear of this manual.

SPECIAL NOTES AND SYMBOLS

X000	Part first added at this serial number
00X	Part removed after this serial number

ITEM NAME

In the Parts List, an Item Name is separated from the description by a colon (:). Because of space limitations, an Item Name may sometimes appear as incomplete. For further Item Name identification, the U.S. Federal Cataloging Handbook H6-1 can be utilized where possible.

ABBREVIATIONS

ACTR	ACTUATOR	PLSTC	PLASTIC
ASSY	ASSEMBLY	QTZ	QUARTZ
CAP	CAPACITOR	RECP	RECEPTACLE
CER	CERAMIC	RES	RESISTOR
CKT	CIRCUIT	RF	RADIO FREQUENCY
COMP	COMPOSITION	SEL	SELECTED
CONN	CONNECTOR	SEMICOND	SEMICONDUCTOR
ELCTLT	ELECTROLYTIC	SENS	SENSITIVE
ELEC	ELECTRICAL	VAR	VARIABLE
INCAND	INCANDESCENT	WW	WIREWOUND
LED	LIGHT EMITTING DIODE	XFMR	TRANSFORMER
NONWIR	NON WIREWOUND	XTAL	CRYSTAL

CROSS INDEX—MFR. CODE NUMBER TO MANUFACTURER

Mfr. Code	Manufacturer	Address	City, State, Zip
0000L	MATSUHITA ELECTRIC	200 PARK AVENUE, 54TH FLOOR	NEW YORK, NY 10017
01121	ALLEN-BRADLEY COMPANY	1201 2ND STREET SOUTH	MILWAUKEE, WI 53204
01295	TEXAS INSTRUMENTS, INC., SEMICONDUCTOR GROUP	P O BOX 5012, 13500 N CENTRAL EXPRESSWAY	DALLAS, TX 75222
01963	CHERRY ELECTRICAL PRODUCTS CORPORATION	3600 SUNSET AVENUE	WAUKEGAN, IL 60085
02735	RCA CORPORATION, SOLID STATE DIVISION	ROUTE 202	SOMERVILLE, NY 08876
02777	HOPKINS ENGINEERING COMPANY	12900 FOOTHILL BLVD.	SAN FERNANDO, CA 91342
03508	GENERAL ELECTRIC COMPANY, SEMI-CONDUCTOR PRODUCTS DEPARTMENT	ELECTRONICS PARK	SYRACUSE, NY 13201
04222	AVX CERAMICS, DIVISION OF AVX CORP.	P O BOX 867, 19TH AVE. SOUTH	MURTLE BEACH, SC 29577
04713	MOTOROLA, INC., SEMICONDUCTOR PROD. DIV.	5005 E MCDOWELL RD,PO BOX 20923	PHOENIX, AZ 85036
05574	VIKING INDUSTRIES, INC.	21001 NORDHOFF STREET	CHATSWORTH, CA 91311
07109	OAKTRON INDUSTRIES, INC.	704 30TH STREET	MONROE, WI 53566
07263	FAIRCHILD SEMICONDUCTOR, A DIV. OF FAIRCHILD CAMERA AND INSTRUMENT CORP.	464 ELLIS STREET	MOUNTAIN VIEW, CA 94042
07910	TELEDYNE SEMICONDUCTOR	12515 CHADRON AVE.	HAWTHORNE, CA 90250
08806	GENERAL ELECTRIC CO., MINIATURE LAMP PRODUCTS DEPARTMENT	NELA PARK	CLEVELAND, OH 44112
14099	SEMTECH CORP.	652 MITCHELL RD.	NEWBURY PARK, CA 91320
14752	ELECTRO CUBE INC.	1710 S. DEL MAR AVE.	SAN GABRIEL, CA 91776
15818	TELEDYNE SEMICONDUCTOR	1300 TERRA BELLA AVE.	MOUNTAIN VIEW, CA 94043
18324	SIGNETICS CORP.	811 E. ARQUES	SUNNYVALE, CA 94086
19396	IILINOIS TOOL WORKS, INC. PAKTRON DIV.	900 FOLLIN LANE, SE	VIENNA, VA 22180
27014	NATIONAL SEMICONDUCTOR CORP.	2900 SEMICONDUCTOR DR.	SANTA CLARA, CA 95051
32293	INTERSIL, INC.	10900 N. TANTAU AVE.	CUPERTINO, CA 95014
32997	BOURNS, INC., TRIMPOT PRODUCTS DIV.	1200 COLUMBIA AVE.	RIVERSIDE, CA 92507
34371	HARRIS SEMICONDUCTOR, DIV. OF HARRIS CORPORATION	P. O. BOX 883	MELBOURNE, FL 32901
50778	PORTESCAP, US	730 FIFTH AVENUE	NEW YORK, NEW YORK 10019
54492	CINCH COMPANY	6126 MONTECITO BLVD.,PO BOX 167	SANTA ROSA, CA 95402
56289	SPRAGUE ELECTRIC CO.		NORTH ADAMS, MA 01247
71400	BUSSMAN MFG., DIVISION OF MCGRAW-EDISON CO.	2536 W. UNIVERSITY ST.	ST. LOUIS, MO 63107
71744	CHICAGO MINIATURE LAMP WORKS	4433 RAVENSWOOD AVE.	CHICAGO, IL 60640
72136	ELECTRO MOTIVE CORPORATION, SUB OF INTERNATIONAL ELECTRONICS CORPORATION	SOUTH PARK AND JOHN STREETS	WILLIMANTIC, CT 06226
72982	ERIE TECHNOLOGICAL PRODUCTS, INC.	644 W. 12TH ST.	ERIE, PA 16512
73138	BECKMAN INSTRUMENTS, INC., HELIPOT DIV.	2500 HARBOR BLVD.	FULLERTON, CA 92634
75042	TRW ELECTRONIC COMPONENTS, IRC FIXED RESISTORS, PHILADELPHIA DIVISION	401 N. BROAD ST.	PHILADELPHIA, PA 19108
76493	BELL INDUSTRIES, INC., MILLER, J. W., DIV.	19070 REYES AVE., P O BOX 5825	COMPTON, CA 90224
80009	TEKTRONIX, INC.	P O BOX 500	BEAVERTON, OR 97077
81483	INTERNATIONAL RECTIFIER CORP.	9220 SUNSET BLVD.	LOS ANGELES, CA 90069
83003	VARO, INC.	P O BOX 411, 2203 WALNUT STREET	GARLAND, TX 75040
86684	RCA CORP., ELECTRONIC COMPONENTS DIV.	415 S. 5TH STREET	HARRISON, NJ 07029
87034	ILLUMINATED PRODUCTS INC., A SUB OF OAK INDUSTRIES, INC.	2620 SUSAN ST, PO BOX 11930	SANTA ANA, CA 92711
90201	MALLORY CAPACITOR CO., DIV. OF P. R. MALLORY AND CO., INC.	3029 E WASHINGTON STREET P O BOX 372	INDIANAPOLIS, IN 46206
91637	DALE ELECTRONICS, INC.	P. O. BOX 609	COLUMBUS, NE 68601
98939	FLUID REGULATORS CORP.	313 GILLETTE ST.	PAINSVILLE, OH 44060

Ckt No.	Tektronix Part No.	Serial/Model No. Eff	Dscont	Name & Description	Mfr Code	Mfr Part Number
				CIRCUIT BOARD ASSEMBLIES		
A1	----- -----			CKT BOARD ASSY:POWER SUPPLY		
A2	670-4008-00	B010151	B030539	CKT BOARD ASSY:C.P.U.	80009	670-4008-00
A2	670-4008-01	B030540	B061590	CKT BOARD ASSY:C.P.U.	80009	670-4008-01
A2	670-4008-02	B061591	B069999	CKT BOARD ASSY:C.P.U.	80009	670-4008-02
A2	670-4008-03	B070000	B071882	CKT BOARD ASSY:C.P.U.	80009	670-4008-03
A2	670-4008-04	B071883		CKT BOARD ASSY:C.P.U.	80009	670-4008-04
A3	670-4004-01			CKT BOARD ASSY:16K MEMORY(OPT 20)	80009	670-4004-01
A3	670-4004-02			CKT BOARD ASSY:24K MEMORY(OPT 21)	80009	670-4004-02
A3	670-4004-03			CKT BOARD ASSY:32K MEMORY(OPT 22)	80009	670-4004-03
A4	672-0546-03	B010151	B051378	CKT BOARD ASSY:DISPLAY	80009	672-0546-03
A4	672-0546-04	B051379	B082622	CKT BOARD ASSY:DISPLAY	80009	672-0546-04
A4[1]	672-0546-05	B082623	B082819	CKT BOARD ASSY:DISPLAY	80009	672-0546-05
A4	672-0546-06	B082820		CKT BOARD ASSY:DISPLAY	80009	672-0546-06
A5	119-0707-01			KEYBOARD,CMPTR:W/KEY CAPS	80009	119-0707-01
A6	670-4003-00			CKT BOARD ASSY:TAPE DRIVE	80009	670-4003-00
A7	672-0545-00	B010151	B041005	CKT BOARD ASSY:STATUS W/MICRO SWITCH	80009	672-0545-00
	672-0545-01	B041006		CKT BOARD ASSY:STATUS W/MICRO SWITCH	80009	672-0545-01
A8	670-4029-00			CKT BOARD ASSY:INDICATOR LIGHT	80009	670-4029-00
				A1 CKT BOARD ASSY:POWER SUPPLY		
C101	290-0549-00			CAP.,FXD,ELCTLT:150UF,400VDC/250VDC	56289	68D20193
C121	290-0506-00			CAP.,FXD,ELCTLT:9600UF,+100-10%,25V	56289	68D10471
C251	290-0526-00			CAP.,FXD,ELCTLT:6.8UF,20%,6V	90201	TDC685M006EL
C301	290-0506-00			CAP.,FXD,ELCTLT:9600UF,+100-10%,25V	56289	68D10471
C341	281-0525-00			CAP.,FXD,CER DI:470PF,+/-94PF,500V	04222	7001-1364
C411	290-0746-00			CAP.,FXD,ELCTLT:47UF,+50-10%,16V	56289	502D226
C421	290-0508-00			CAP.,FXD,ELCTLT:18,000UF,+100-10%,15V	56289	68D10444
C442	281-0504-00			CAP.,FXD,CER DI:10PF,+/-1PF,500V	72982	301-055C0G0100F
C511	290-0746-00			CAP.,FXD,ELCTLT:47UF,+50-10%,16V	56289	502D226
C512	290-0746-00			CAP.,FXD,ELCTLT:47UF,+50-10%,16V	56289	502D226
C551	290-0771-00			CAP.,FXD,ELCTLT:220UF,+50-10%,10VDC	0000L	ECE-A10V220L
C552	283-0028-00	XB010312		CAP.,FXD,CER DI:0.0022UF,20%,50V	56289	19C606
CR21	152-0200-00			SEMICOND DEVICE:SILICON,400V,1500MA	80009	152-0200-00
CR31	152-0200-00			SEMICOND DEVICE:SILICON,400V,1500MA	80009	152-0200-00
CR32	152-0406-00			SEMICOND DEVICE:SILICON,200V,3A	80009	152-0406-00
CR331	152-0066-00			SEMICOND DEVICE:SILICON,400V,750MA	80009	152-0066-00
CR332	152-0066-00			SEMICOND DEVICE:SILICON,400V,750MA	80009	152-0066-00
CR401	152-0066-00			SEMICOND DEVICE:SILICON,400V,750MA	80009	152-0066-00
CR411	152-0066-00			SEMICOND DEVICE:SILICON,400V,750MA	80009	152-0066-00
CR501	152-0198-02			SEMICOND DEVICE:SILICON,200V,3A	14099	3SM2

[1]Replaces 672-0546-04.

Ckt No.	Tektronix Part No.	Serial/Model No. Eff	Dscont	Name & Description	Mfr Code	Mfr Part Number
F331	159-0021-00	B010151	B030783	FUSE,CARTRIDGE:3AG,2A,250V,FAST-BLOW	71400	AGC 2
F331	159-0015-00	B030784		FUSE,CARTRIDGE:3AG,3A,250V,FAST-BLOW	71400	AGC 3
F332	159-0021-00	B010151	B030784	FUSE,CARTRIDGE:3AG,2A,250V,FAST-BLOW	71400	AGC 2
F332	159-0015-00	B030784		FUSE,CARTRIDGE:3AG,3A,250V,FAST-BLOW	71400	AGC 3
F1002	159-0034-00			FUSE,CARTRIDGE:3AG,1.6A,125V,SLOW-BLOW	71400	MDL 1 6/10
F1002	159-0018-00			FUSE,CARTRIDGE:3AG,0.8A,250V,SLOW-BLOW	71400	MDL 8/10
FL1000	119-0389-00			FILTER,RAD INTE:115/230V,3A	02777	F11935-3
Q251	151-0521-00			TRANSISTOR:200V,8.0A	03508	C122B
Q252	151-0405-00			TRANSISTOR:SILICON,NPN,SEL FROM MJE800	80009	151-0405-00
Q451	151-0476-00			TRANSISTOR:SILICON,NPN	01295	TIP31C
Q452	151-0476-00			TRANSISTOR:SILICON,NPN	01295	TIP31C
Q453	151-0301-00			TRANSISTOR:SILICON,PNP	04713	2N2907A
Q454	151-0301-00			TRANSISTOR:SILICON,PNP	04713	2N2907A
Q551	151-0302-00			TRANSISTOR:SILICON,NPN	04713	2N2222A
Q552	151-0425-00			TRANSISTOR:SILICON,NPN	04713	MJE1101
R11	305-0124-00			RES.,FXD,CMPSN:120K OHM,5%,2W	01121	HB1245
R51	311-1236-00			RES.,VAR,NONWIR:250 OHM,10%,0.50W	73138	72X-22-0-251K
R52	315-0152-00			RES.,FXD,CMPSN:1.5K OHM,5%,0.25W	01121	CB1525
R101	303-0104-00			RES.,FXD,CMPSN:100K OHM,5%,1W	01121	GB1045
R221	307-0113-00			RES.,FXD,CMPSN:5.1 OHM,5%,0.25W	01121	CB51G5
R231	315-0200-00			RES.,FXD,CMPSN:20 OHM,5%,0.25W	01121	CB2005
R241	315-0511-00			RES.,FXD,CMPSN:510 OHM,5%,0.25W	01121	CB5115
R251	315-0301-00			RES.,FXD,CMPSN:300 OHM,5%,0.25W	01121	CB3015
R252	303-0683-00			RES.,FXD,CMPSN:68K OHM,5%,1W	01121	GB6835
R331	315-0223-00			RES.,FXD,CMPSN:22K OHM,5%,0.25W	01121	CB2235
R341	308-0677-00			RES.,FXD,WW:1 OHM,5%,2W	75042	BWH-1R000J
R342	315-0332-00			RES.,FXD,CMPSN:3.3K OHM,5%,0.25W	01121	CB3325
R351	321-0182-00			RES.,FXD,FILM:768 OHM,1%,0.125W	91637	MFF1816G768R0F
R352	321-0210-00			RES.,FXD,FILM:1.5K OHM,1%,0.125W	91637	MFF1816G15000F
R353	308-0677-00			RES.,FXD,WW:1 OHM,5%,2W	75042	BWH-1R000J
R431	321-0300-00			RES.,FXD,FILM:13K OHM,1%,0.125W	91637	MFF1816G13001F
R443	321-0268-00			RES.,FXD,FILM:6.04K OHM,1%,0.125W	91637	MFF1816G60400F
R444	321-0266-00			RES.,FXD,FILM:5.76K OHM,1%,0.125W	91637	MFF1816G57600F
R452	315-0151-00			RES.,FXD,CMPSN:150 OHM,5%,0.25W	01121	CB1515
R453	315-0752-00			RES.,FXD,CMPSN:7.5K OHM,5%,0.25W	01121	CB7525
R454	315-0471-00			RES.,FXD,CMPSN:470 OHM,5%,0.25W	01121	CB4715
R455	321-0216-00			RES.,FXD,FILM:1.74K OHM,1%,0.125W	91637	MFF1816G17400F
R456	321-0309-00			RES.,FXD,FILM:16.2K OHM,1%,0.125W	91637	MFF1816G16201F
R531	315-0821-00			RES.,FXD,CMPSN:820 OHM,5%,0.25W	01121	CB8215
R542	315-0511-00			RES.,FXD,CMPSN:510 OHM,5%,0.25W	01121	CB5115
R543	315-0112-00			RES.,FXD,CMPSN:1.1K OHM,5%,0.25W	01121	CB1125
R550	321-0197-00			RES.,FXD,FILM:1.1K OHM,1%,0.125W	91637	MFF1816G11000F
R551	308-0643-00			RES.,FXD,WW:0.1 OHM,3%,3W	91637	RS2B-ER1000H
R553	321-0033-00			RES.,FXD,FILM:21.5 OHM,1%,0.125W	91637	MFF1816G21R50F
R554	315-0681-00			RES.,FXD,CMPSN:680 OHM,5%,0.25W	01121	CB6815
T1001	120-0998-00			XFMR,PWR,SDN SU:	80009	120-0998-00
U341	156-0071-00			MICROCIRCUIT,LI:VOLTAGE REGULATOR	07263	723DC
U352	156-0285-00			MICROCIRCUIT,LI:VOLTAGE REGULATOR,12V,1A	80009	156-0285-00
U442	156-0067-00			MICROCIRCUIT,LI:OPERATIONAL AMPLIFIER	80009	156-0067-00
U541	156-0158-00			MICROCIRCUIT,LI:DUAL OPERATIONAL AMPLIFIER	80009	156-0158-00

Ckt No.	Tektronix Part No.	Serial/Model No. Eff	Dscont	Name & Description	Mfr Code	Mfr Part Number
VR251	152-0175-00			SEMICOND DEVICE:ZENER,0.4W,5.6V,5%	80009	152-0175-00
VR252	152-0283-00			SEMICOND DEVICE:ZENER,0.4W,43V,5%	04713	1N976B
VR531	152-0395-00			SEMICOND DEVICE:ZENER,0.4W,4.3V,5%	04713	1N749A
				A2 CKT BOARD ASSY:C.P.U.		
C12	283-0005-00			CAP.,FXD,CER DI:0.01UF,+100-0%,250V	72982	8131N300Z5U0103P
C21	283-0010-00			CAP.,FXD,CER DI:0.05UF,+100-20%,50V	56289	273C20
C54	283-0114-00			CAP.,FXD,CER DI:0.0015UF,5%,200V	72982	805-509B152J
C56	283-0114-00			CAP.,FXD,CER DI:0.0015UF,5%,200V	72982	805-509B152J
C71	283-0010-00			CAP.,FXD,CER DI:0.05UF,+100-20%,50V	56289	273C20
C81	283-0010-00			CAP.,FXD,CER DI:0.05UF,+100-20%,50V	56289	273C20
C91	283-0010-00			CAP.,FXD,CER DI:0.05UF,+100-20%,50V	56289	273C20
C101	283-0010-00	XB020880		CAP.,FXD,CER DI:0.05UF,+100-20%,50V	56289	273C20
C105	283-0010-00	XB020880		CAP.,FXD,CER DI:0.05UF,+100-20%,50V	56289	273C20
C111	283-0010-00			CAP.,FXD,CER DI:0.05UF,+100-20%,50V	56289	273C20
C115	283-0010-00			CAP.,FXD,CER DI:0.05UF,+100-20%,50V	56289	273C20
C121	283-0010-00	XB020880		CAP.,FXD,CER DI:0.05UF,+100-20%,50V	56289	273C20
C125	283-0010-00	XB020880		CAP.,FXD,CER DI:0.05UF,+100-20%,50V	56289	273C20
C135	283-0010-00	XB020880		CAP.,FXD,CER DI:0.05UF,+100-20%,50V	56289	273C20
C141	283-0010-00			CAP.,FXD,CER DI:0.05UF,+100-20%,50V	56289	273C20
C153	283-0010-00			CAP.,FXD,CER DI:0.05UF,+100-20%,50V	56289	273C20
C181	283-0010-00			CAP.,FXD,CER DI:0.05UF,+100-20%,50V	56289	273C20
C183	283-0010-00			CAP.,FXD,CER DI:0.05UF,+100-20%,50V	56289	273C20
C191	283-0010-00			CAP.,FXD,CER DI:0.05UF,+100-20%,50V	56289	273C20
C193	283-0010-00			CAP.,FXD,CER DI:0.05UF,+100-20%,50V	56289	273C20
C205	283-0010-00			CAP.,FXD,CER DI:0.05UF,+100-20%,50V	56289	273C20
C206	283-0010-00	XB020880		CAP.,FXD,CER DI:0.05UF,+100-20%,50V	56289	273C20
C211	283-0010-00	XB020880		CAP.,FXD,CER DI:0.05UF,+100-20%,50V	56289	273C20
C215	283-0010-00			CAP.,FXD,CER DI:0.05UF,+100-20%,50V	56289	273C20
C217	283-0010-00			CAP.,FXD,CER DI:0.05UF,+100-20%,50V	56289	273C20
C218	283-0010-00			CAP.,FXD,CER DI:0.05UF,+100-20%,50V	56289	273C20
C225	283-0010-00			CAP.,FXD,CER DI:0.05UF,+100-20%,50V	56289	273C20
C231	283-0010-00			CAP.,FXD,CER DI:0.05UF,+100-20%,50V	56289	273C20
C235	283-0010-00	XB020880		CAP.,FXD,CER DI:0.05UF,+100-20%,50V	56289	273C20
C261	283-0010-00			CAP.,FXD,CER DI:0.05UF,+100-20%,50V	56289	273C20
C265	283-0010-00	XB020880		CAP.,FXD,CER DI:0.05UF,+100-20%,50V	56289	273C20
C285	283-0010-00			CAP.,FXD,CER DI:0.05UF,+100-20%,50V	56289	273C20
C291	283-0010-00			CAP.,FXD,CER DI:0.05UF,+100-20%,50V	56289	273C20
C311	283-0203-00			CAP.,FXD,CER DI:0.47UF,20%,50V	72982	8131N075 E474M
C312	283-0178-00			CAP.,FXD,CER DI:0.1UF,+80-20%,100V	72982	8131N145 E 104Z
C313	283-0010-00			CAP.,FXD,CER DI:0.05UF,+100-20%,50V	56289	273C20
C314	283-0010-00			CAP.,FXD,CER DI:0.05UF,+100-20%,50V	56289	273C20
C321	283-0178-00			CAP.,FXD,CER DI:0.1UF,+80-20%,100V	72982	8131N145 E 104Z
C322	283-0010-00			CAP.,FXD,CER DI:0.05UF,+100-20%,50V	56289	273C20
C331	283-0010-00			CAP.,FXD,CER DI:0.05UF,+100-20%,50V	56289	273C20
C335	283-0010-00	XB020880		CAP.,FXD,CER DI:0.05UF,+100-20%,50V	56289	273C20
C337	283-0010-00			CAP.,FXD,CER DI:0.05UF,+100-20%,50V	56289	273C20
C361	283-0010-00			CAP.,FXD,CER DI:0.05UF,+100-20%,50V	56289	273C20
C381	283-0010-00			CAP.,FXD,CER DI:0.05UF,+100-20%,50V	56289	273C20
C383	283-0010-00			CAP.,FXD,CER DI:0.05UF,+100-20%,50V	56289	273C20

Ckt No.	Tektronix Part No.	Serial/Model No. Eff	Dscont	Name & Description	Mfr Code	Mfr Part Number
C385	283-0010-00			CAP.,FXD,CER DI:0.05UF,+100-20%,50V	56289	273C20
C411	283-0178-00			CAP.,FXD,CER DI:0.1UF,+80-20%,100V	72982	8131N145 E 104Z
C412	283-0010-00			CAP.,FXD,CER DI:0.05UF,+100-20%,50V	56289	273C20
C415	283-0178-00			CAP.,FXD,CER DI:0.1UF,+80-20%,100V	72982	8131N145 E 104Z
C416	283-0010-00			CAP.,FXD,CER DI:0.05UF,+100-20%,50V	56289	273C20
C421	283-0178-00			CAP.,FXD,CER DI:0.1UF,+80-20%,100V	72982	8131N145 E 104Z
C422	283-0010-00			CAP.,FXD,CER DI:0.05UF,+100-20%,50V	56289	273C20
C425	283-0178-00			CAP.,FXD,CER DI:0.1UF,+80-20%,100V	72982	8131N145 E 104Z
C426	283-0010-00			CAP.,FXD,CER DI:0.05UF,+100-20%,50V	56289	273C20
C435	283-0010-00			CAP.,FXD,CER DI:0.05UF,+100-20%,50V	56289	273C20
C461	283-0010-00	XB020880		CAP.,FXD,CER DI:0.05UF,+100-20%,50V	56289	273C20
C481	283-0010-00			CAP.,FXD,CER DI:0.05UF,+100-20%,50V	56289	273C20
C483	283-0010-00			CAP.,FXD,CER DI:0.05UF,+100-20%,50V	56289	273C20
C485	283-0010-00			CAP.,FXD,CER DI:0.05UF,+100-20%,50V	56289	273C20
C487	283-0010-00			CAP.,FXD,CER DI:0.05UF,+100-20%,50V	56289	273C20
C511	283-0178-00			CAP.,FXD,CER DI:0.1UF,+80-20%,100V	72982	8131N145 E 104Z
C512	283-0010-00			CAP.,FXD,CER DI:0.05UF,+100-20%,50V	56289	273C20
C515	283-0178-00			CAP.,FXD,CER DI:0.1UF,+80-20%,100V	72982	8131N145 E 104Z
C516	283-0010-00			CAP.,FXD,CER DI:0.05UF,+100-20%,50V	56289	273C20
C517	283-0178-00			CAP.,FXD,CER DI:0.1UF,+80-20%,100V	72982	8131N145 E 104Z
C518	283-0010-00			CAP.,FXD,CER DI:0.05UF,+100-20%,50V	56289	273C20
C521	283-0178-00			CAP.,FXD,CER DI:0.1UF,+80-20%,100V	72982	8131N145 E 104Z
C522	283-0010-00			CAP.,FXD,CER DI:0.05UF,+100-20%,50V	56289	273C20
C525	283-0178-00			CAP.,FXD,CER DI:0.1UF,+80-20%,100V	72982	8131N145 E 104Z
C526	283-0010-00			CAP.,FXD,CER DI:0.05UF,+100-20%,50V	56289	273C20
C527	283-0178-00			CAP.,FXD,CER DI:0.1UF,+80-20%,100V	72982	8131N145 E 104Z
C528	283-0010-00			CAP.,FXD,CER DI:0.05UF,+100-20%,50V	56289	273C20
C531	283-0010-00	XB020880		CAP.,FXD,CER DI:0.05UF,+100-20%,50V	56289	273C20
C537	283-0010-00	XB020880		CAP.,FXD,CER DI:0.05UF,+100-20%,50V	56289	273C20
C561	283-0010-00	XB020880		CAP.,FXD,CER DI:0.05UF,+100-20%,50V	56289	273C20
C565	283-0010-00			CAP.,FXD,CER DI:0.05UF,+100-20%,50V	56289	273C20
C581	283-0010-00			CAP.,FXD,CER DI:0.05UF,+100-20%,50V	56289	273C20
C583	283-0010-00			CAP.,FXD,CER DI:0.05UF,+100-20%,50V	56289	273C20
C585	283-0010-00			CAP.,FXD,CER DI:0.05UF,+100-20%,50V	56289	273C20
C601	290-0517-00			CAP.,FXD,ELCTLT:6.8UF,20%,35V	56289	196D685X0035KA1
C605	290-0746-00			CAP.,FXD,ELCTLT:47UF,+50-10%,16V	56289	502D226
C611	283-0178-00			CAP.,FXD,CER DI:0.1UF,+80-20%,100V	72982	8131N145 E 104Z
C612	283-0010-00			CAP.,FXD,CER DI:0.05UF,+100-20%,50V	56289	273C20
C615	283-0178-00			CAP.,FXD,CER DI:0.1UF,+80-20%,100V	72982	8131N145 E 104Z
C616	283-0010-00			CAP.,FXD,CER DI:0.05UF,+100-20%,50V	56289	273C20
C621	283-0178-00			CAP.,FXD,CER DI:0.1UF,+80-20%,100V	72982	8131N145 E 104Z
C622	283-0010-00			CAP.,FXD,CER DI:0.05UF,+100-20%,50V	56289	273C20
C625	283-0178-00			CAP.,FXD,CER DI:0.1UF,+80-20%,100V	72982	8131N145 E 104Z
C626	283-0010-00			CAP.,FXD,CER DI:0.05UF,+100-20%,50V	56289	273C20
C627	283-0010-00			CAP.,FXD,CER DI:0.05UF,+100-20%,50V	56289	273C20
C631	283-0010-00			CAP.,FXD,CER DI:0.05UF,+100-20%,50V	56289	273C20
C671	285-1050-00			CAP.,FXD,PLSTC:0.1UF,1%,200V	14752	230B1C104F
C672	290-0531-00			CAP.,FXD,ELCTLT:100UF,20%,10V	90201	TDC107M010WLC
C683	283-0010-00			CAP.,FXD,CER DI:0.05UF,+100-20%,50V	56289	273C20
C684	283-0080-00			CAP.,FXD,CER DI:0.022UF,+80-20%,25V	56289	19C611
C685	283-0010-00			CAP.,FXD,CER DI:0.05UF,+100-20%,50V	56289	273C20
C692	281-0662-00			CAP.,FXD,CER DI:10PF,+/-0.5PF,500V	72982	301-000H3M0100D
C693	290-0517-00			CAP.,FXD,ELCTLT:6.8UF,20%,35V	56289	196D685X0035KA1

Ckt No.	Tektronix Part No.	Serial/Model No. Eff	Dscont	Name & Description	Mfr Code	Mfr Part Number
C695	283-0119-00			CAP.,FXD,CER DI:2200PF,5%,200V	72982	855-535B222J
C701	283-0010-00			CAP.,FXD,CER DI:0.05UF,+100-20%,50V	56289	273C20
C705	283-0010-00			CAP.,FXD,CER DI:0.05UF,+100-20%,50V	56289	273C20
C713	281-0546-00			CAP.,FXD,CER DI:330PF,10%,500V	04222	7001-1380
C751	283-0010-00			CAP.,FXD,CER DI:0.05UF,+100-20%,50V	56289	273C20
C765	283-0010-00			CAP.,FXD,CER DI:0.05UF,+100-20%,50V	56289	273C20
C791	283-0010-00			CAP.,FXD,CER DI:0.05UF,+100-20%,50V	56289	273C20
C793	283-0010-00			CAP.,FXD,CER DI:0.05UF,+100-20%,50V	56289	273C20
C811	285-1067-00			CAP.,FXD,PLSTC:0.5UF,1%,200V	14752	230B1C504F
C815	283-0010-00			CAP.,FXD,CER DI:0.05UF,+100-20%,50V	56289	273C20
C816	283-0083-00			CAP.,FXD,CER DI:0.0047UF,20%,500V	72982	811-565C472J
C823	283-0010-00			CAP.,FXD,CER DI:0.05UF,+100-20%,50V	56289	273C20
C853	290-0534-00			CAP.,FXD,ELCTLT:1UF,20%,35V	56289	196D105X0035HA1
C854	290-0534-00			CAP.,FXD,ELCTLT:1UF,20%,35V	56289	196D105X0035HA1
C871	290-0534-00			CAP.,FXD,ELCTLT:1UF,20%,35V	56289	196D105X0035HA1
C872	290-0534-00			CAP.,FXD,ELCTLT:1UF,20%,35V	56289	196D105X0035HA1
C884	290-0718-00			CAP.,FXD,ELCTLT:22UF,20%,35V	56289	196D226X0035PE3
C895	283-0065-00			CAP.,FXD,CER DI:0.001UF,5%,100V	72982	805-505B102J
C896	283-0065-00			CAP.,FXD,CER DI:0.001UF,5%,100V	72982	805-505B102J
C931	290-0771-00			CAP.,FXD,ELCTLT:220UF,+50-10%,10VDC	0000L	ECE-A10V220L
C945	290-0534-00			CAP.,FXD,ELCTLT:1UF,20%,35V	56289	196D105X0035HA1
C951	285-1142-00			CAP.,FXD,PLSTC:0.01UF,1%,200VDC	19396	PP580C103F
C954	290-0746-00			CAP.,FXD,ELCTLT:47UF,+50-10%,16V	56289	502D226
C956	290-0534-00			CAP.,FXD,ELCTLT:1UF,20%,35V	56289	196D105X0035HA1
C961	281-0525-00			CAP.,FXD,CER DI:470PF,+/-94PF,500V	04222	7001-1364
C962	285-1142-00			CAP.,FXD,PLSTC:0.01UF,1%,200VDC	19396	PP580C103F
C963	281-0525-00			CAP.,FXD,CER DI:470PF,+/-94PF,500V	04222	7001-1364
C964	285-1142-00			CAP.,FXD,PLSTC:0.01UF,1%,200VDC	19396	PP580C103F
C965	290-0746-00			CAP.,FXD,ELCTLT:47UF,+50-10%,16V	56289	502D226
C967	290-0746-00			CAP.,FXD,ELCTLT:47UF,+50-10%,16V	56289	502D226
C971	285-1142-00			CAP.,FXD,PLSTC:0.01UF,1%,200VDC	19396	PP580C103F
C998	283-0010-00			CAP.,FXD,CER DI:0.05UF,+100-20%,50V	56289	273C20
C999	283-0010-00			CAP.,FXD,CER DI:0.05UF,+100-20%,50V	56289	273C20
CR850	152-0141-02			SEMICOND DEVICE:SILICON,30V,150MA	07910	1N4152
CR851	152-0141-02			SEMICOND DEVICE:SILICON,30V,150MA	07910	1N4152
CR852	152-0141-02			SEMICOND DEVICE:SILICON,30V,150MA	07910	1N4152
CR853	152-0141-02			SEMICOND DEVICE:SILICON,30V,150MA	07910	1N4152
CR854	152-0141-02			SEMICOND DEVICE:SILICON,30V,150MA	07910	1N4152
CR855	152-0141-02			SEMICOND DEVICE:SILICON,30V,150MA	07910	1N4152
CR856	152-0141-02			SEMICOND DEVICE:SILICON,30V,150MA	07910	1N4152
CR857	152-0141-02			SEMICOND DEVICE:SILICON,30V,150MA	07910	1N4152
CR858	156-0106-00			MICROCIRCUIT,LI:MONOLITHIC,6-DIODE ARRAY	86684	CA3039
CR859	156-0106-00			MICROCIRCUIT,LI:MONOLITHIC,6-DIODE ARRAY	86684	CA3039
CR861	152-0141-02			SEMICOND DEVICE:SILICON,30V,150MA	07910	1N4152
CR862	152-0141-02			SEMICOND DEVICE:SILICON,30V,150MA	07910	1N4152
CR869	152-0141-02			SEMICOND DEVICE:SILICON,30V,150MA	07910	1N4152
CR870	152-0141-02			SEMICOND DEVICE:SILICON,30V,150MA	07910	1N4152
CR871	152-0141-02			SEMICOND DEVICE:SILICON,30V,150MA	07910	1N4152
CR872	152-0141-02			SEMICOND DEVICE:SILICON,30V,150MA	07910	1N4152
CR873	152-0141-02			SEMICOND DEVICE:SILICON,30V,150MA	07910	1N4152
CR874	152-0141-02			SEMICOND DEVICE:SILICON,30V,150MA	07910	1N4152
CR875	152-0141-02			SEMICOND DEVICE:SILICON,30V,150MA	07910	1N4152
CR876	152-0141-02			SEMICOND DEVICE:SILICON,30V,150MA	07910	1N4152

Ckt No.	Tektronix Part No.	Serial/Model No. Eff	Dscont	Name & Description	Mfr Code	Mfr Part Number
CR877	152-0141-02			SEMICOND DEVICE:SILICON,30V,150MA	07910	1N4152
CR878	152-0141-02			SEMICOND DEVICE:SILICON,30V,150MA	07910	1N4152
CR881	156-0106-00			MICROCIRCUIT,LI:MONOLITHIC,6-DIODE ARRAY	86684	CA3039
CR882	156-0106-00			MICROCIRCUIT,LI:MONOLITHIC,6-DIODE ARRAY	86684	CA3039
CR883	152-0141-02			SEMICOND DEVICE:SILICON,30V,150MA	07910	1N4152
CR884	152-0141-02			SEMICOND DEVICE:SILICON,30V,150MA	07910	1N4152
CR885	152-0141-02			SEMICOND DEVICE:SILICON,30V,150MA	07910	1N4152
CR896	152-0141-02			SEMICOND DEVICE:SILICON,30V,150MA	07910	1N4152
CR897	152-0141-02			SEMICOND DEVICE:SILICON,30V,150MA	07910	1N4152
CR898	152-0141-02			SEMICOND DEVICE:SILICON,30V,150MA	07910	1N4152
Q51	151-0188-00			TRANSISTOR:SILICON,PNP	01295	2N3906
Q151	151-0188-00			TRANSISTOR:SILICON,PNP	01295	2N3906
Q672	151-0192-00			TRANSISTOR:SILICON,NPN,SEL FROM MPS6521	80009	151-0192-00
Q721	151-0188-00			TRANSISTOR:SILICON,PNP	01295	2N3906
Q795	151-1025-00			TRANSISTOR:SILICON,JFE,N-CHANNEL	80009	151-1025-00
Q796	151-0126-00			TRANSISTOR:SILICON,NPN	15818	2N2484
Q797	151-0410-00			TRANSISTOR:SILICON,PNP	80009	151-0410-00
Q881	151-0410-00			TRANSISTOR:SILICON,PNP	80009	151-0410-00
Q892	151-0126-00			TRANSISTOR:SILICON,NPN	15818	2N2484
Q981	151-0188-00			TRANSISTOR:SILICON,PNP	01295	2N3906
Q982	151-1078-00			TRANSISTOR:SILICON,JFE,N-CHANNEL	80009	151-1078-00
Q983	151-1078-00			TRANSISTOR:SILICON,JFE,N-CHANNEL	80009	151-1078-00
R1	315-0153-00			RES.,FXD,CMPSN:15K OHM,5%,0.25W	01121	CB1535
R11	315-0102-00			RES.,FXD,CMPSN:1K OHM,5%,0.25W	01121	CB1025
R12	315-0102-00			RES.,FXD,CMPSN:1K OHM,5%,0.25W	01121	CB1025
R13	315-0102-00			RES.,FXD,CMPSN:1K OHM,5%,0.25W	01121	CB1025
R14	315-0102-00			RES.,FXD,CMPSN:1K OHM,5%,0.25W	01121	CB1025
R52	315-0220-00			RES.,FXD,CMPSN:22 OHM,5%,0.25W	01121	CB2205
R53	315-0102-00			RES.,FXD,CMPSN:1K OHM,5%,0.25W	01121	CB1025
R54	315-0221-00			RES.,FXD,CMPSN:220 OHM,5%,0.25W	01121	CB2215
R55	315-0221-00			RES.,FXD,CMPSN:220 OHM,5%,0.25W	01121	CB2215
R56	315-0102-00			RES.,FXD,CMPSN:1K OHM,5%,0.25W	01121	CB1025
R61	315-0302-00			RES.,FXD,CMPSN:3K OHM,5%,0.25W	01121	CB3025
R65	315-0561-00			RES.,FXD,CMPSN:560 OHM,5%,0.25W	01121	CB5615
R105	315-0242-00	B010151	B020879X	RES.,FXD,CMPSN:2.4K OHM,5%,0.25W	01121	CB2425
R152	315-0220-00			RES.,FXD,CMPSN:22 OHM,5%,0.25W	01121	CB2205
R153	315-0242-00			RES.,FXD,CMPSN:2.4K OHM,5%,0.25W	01121	CB2425
R171	315-0242-00			RES.,FXD,CMPSN:2.4K OHM,5%,0.25W	01121	CB2425
R172	315-0242-00			RES.,FXD,CMPSN:2.4K OHM,5%,0.25W	01121	CB2425
R173	315-0242-00			RES.,FXD,CMPSN:2.4K OHM,5%,0.25W	01121	CB2425
R174	315-0242-00			RES.,FXD,CMPSN:2.4K OHM,5%,0.25W	01121	CB2425
R175	315-0242-00			RES.,FXD,CMPSN:2.4K OHM,5%,0.25W	01121	CB2425
R217	315-0102-00			RES.,FXD,CMPSN:1K OHM,5%,0.25W	01121	CB1025
R218	315-0242-00	XB020880		RES.,FXD,CMPSN:2.4K OHM,5%,0.25W	01121	CB2425
R219	315-0242-00	XB020880		RES.,FXD,CMPSN:2.4K OHM,5%,0.25W	01121	CB2425
R285	315-0562-00			RES.,FXD,CMPSN:5.6K OHM,5%,0.25W	01121	CB5625
R311	315-0200-00			RES.,FXD,CMPSN:20 OHM,5%,0.25W	01121	CB2005
R321	315-0200-00			RES.,FXD,CMPSN:20 OHM,5%,0.25W	01121	CB2005
R352	315-0302-00			RES.,FXD,CMPSN:3K OHM,5%,0.25W	01121	CB3025
R365	315-0242-00			RES.,FXD,CMPSN:2.4K OHM,5%,0.25W	01121	CB2425
R435	315-0242-00	XB020880		RES.,FXD,CMPSN:2.4K OHM,5%,0.25W	01121	CB2425
R436	315-0242-00	XB020880		RES.,FXD,CMPSN:2.4K OHM,5%,0.25W	01121	CB2425

Ckt No.	Tektronix Part No.	Serial/Model No. Eff	Dscont	Name & Description	Mfr Code	Mfr Part Number
R461	315-0242-00			RES.,FXD,CMPSN:2.4K OHM,5%,0.25W	01121	CB2425
R462	315-0242-00			RES.,FXD,CMPSN:2.4K OHM,5%,0.25W	01121	CB2425
R465	315-0242-00			RES.,FXD,CMPSN:2.4K OHM,5%,0.25W	01121	CB2425
R467	315-0242-00			RES.,FXD,CMPSN:2.4K OHM,5%,0.25W	01121	CB2425
R469	315-0242-00			RES.,FXD,CMPSN:2.4K OHM,5%,0.25W	01121	CB2425
R517	315-0471-00			RES.,FXD,CMPSN:470 OHM,5%,0.25W	01121	CB4715
R655	315-0203-00			RES.,FXD,CMPSN:20K OHM,5%,0.25W	01121	CB2035
R656	315-0203-00			RES.,FXD,CMPSN:20K OHM,5%,0.25W	01121	CB2035
R671	321-0617-00			RES.,FXD,FILM:111K OHM,1%,0.125W	91637	MFF1816G11102F
R674	315-0472-00			RES.,FXD,CMPSN:4.7K OHM,5%,0.25W	01121	CB4725
R675	315-0335-00			RES.,FXD,CMPSN:3.3M OHM,5%,0.25W	01121	CB3355
R676	315-0273-00			RES.,FXD,CMPSN:27K OHM,5%,0.25W	01121	CB2735
R677	315-0203-00			RES.,FXD,CMPSN:20K OHM,5%,0.25W	01121	CB2035
R681	315-0114-00			RES.,FXD,CMPSN:110K OHM,5%,0.25W	01121	CB1145
R682	315-0183-00			RES.,FXD,CMPSN:18K OHM,5%,0.25W	01121	CB1835
R683	311-1230-00			RES.,VAR,NONWIR:20K OHM,20%,0.50W	32997	3386F-T04-203
R684	315-0472-00			RES.,FXD,CMPSN:4.7K OHM,5%,0.25W	01121	CB4725
R685	311-1230-00			RES.,VAR,NONWIR:20K OHM,20%,0.50W	32997	3386F-T04-203
R691	315-0271-00			RES.,FXD,CMPSN:270 OHM,5%,0.25W	01121	CB2715
R692	321-0613-00			RES.,FXD,FILM:5.03K OHM,1%,0.125W	91637	MFF1816G50300F
R695	321-0932-00			RES.,FXD,FILM:2.5K OHM,1%,0.125W	91637	MFF1816G2500F
R713	315-0102-00			RES.,FXD,CMPSN:1K OHM,5%,0.25W	01121	CB1025
R714	315-0102-00			RES.,FXD,CMPSN:1K OHM,5%,0.25W	01121	CB1025
R721	315-0202-00			RES.,FXD,CMPSN:2K OHM,5%,0.25W	01121	CB2025
R722	315-0132-00			RES.,FXD,CMPSN:1.3K OHM,5%,0.25W	01121	CB1325
R751	315-0102-00			RES.,FXD,CMPSN:1K OHM,5%,0.25W	01121	CB1025
R752	315-0472-00			RES.,FXD,CMPSN:4.7K OHM,5%,0.25W	01121	CB4725
R791	315-0472-00			RES.,FXD,CMPSN:4.7K OHM,5%,0.25W	01121	CB4725
R792	315-0472-00			RES.,FXD,CMPSN:4.7K OHM,5%,0.25W	01121	CB4725
R793	315-0472-00			RES.,FXD,CMPSN:4.7K OHM,5%,0.25W	01121	CB4725
R794	315-0203-00			RES.,FXD,CMPSN:20K OHM,5%,0.25W	01121	CB2035
R811	321-0412-00			RES.,FXD,FILM:191K OHM,1%,0.125W	91637	MFF1816G19102F
R816	321-0329-00			RES.,FXD,FILM:26.1K OHM,1%,0.125W	91637	MFF1816G26101F
R853	321-0357-00			RES.,FXD,FILM:51.1K OHM,1%,0.125W	91637	MFF1816G51101F
R854	315-0101-00			RES.,FXD,CMPSN:100 OHM,5%,0.25W	01121	CB1015
R867	321-0374-00			RES.,FXD,FILM:76.8K OHM,1%,0.125W	91637	MFF1816G76801F
R868	321-0416-00			RES.,FXD,FILM:210K OHM,1%,0.125W	91637	MFF1816G21002F
R869	321-0374-00			RES.,FXD,FILM:76.8K OHM,1%,0.125W	91637	MFF1816G76801F
R870	315-0101-00			RES.,FXD,CMPSN:100 OHM,5%,0.25W	01121	CB1015
R873	321-0363-00			RES.,FXD,FILM:59K OHM,1%,0.125W	91637	MFF1816G59001F
R874	321-0306-00			RES.,FXD,FILM:15K OHM,1%,0.125W	91637	MFF1816G15001F
R875	321-0204-00			RES.,FXD,FILM:1.3K OHM,1%,0.125W	91637	MFF1816G13000F
R876	315-0101-00			RES.,FXD,CMPSN:100 OHM,5%,0.25W	01121	CB1015
R877	315-0396-00			RES.,FXD,CMPSN:39M OHM,5%,0.25W	01121	CB3965
R881	315-0472-00			RES.,FXD,CMPSN:4.7K OHM,5%,0.25W	01121	CB4725
R882	315-0472-00			RES.,FXD,CMPSN:4.7K OHM,5%,0.25W	01121	CB4725
R883	315-0472-00			RES.,FXD,CMPSN:4.7K OHM,5%,0.25W	01121	CB4725
R884	315-0100-00			RES.,FXD,CMPSN:10 OHM,5%,0.25W	01121	CB1005
R885	321-0223-00			RES.,FXD,FILM:2.05K OHM,1%,0.125W	91637	MFF1816G20500F
R886	321-0251-00			RES.,FXD,FILM:4.02K OHM,1%,0.125W	91637	MFF1816G40200F
R887	321-0280-00			RES.,FXD,FILM:8.06K OHM,1%,0.125W	91637	MFF1816G80600F
R888	315-0681-00			RES.,FXD,CMPSN:680 OHM,5%,0.25W	01121	CB6815
R891	315-0473-00			RES.,FXD,CMPSN:47K OHM,5%,0.25W	01121	CB4735

Ckt No.	Tektronix Part No.	Serial/Model No. Eff	Dscont	Name & Description	Mfr Code	Mfr Part Number
R892	315-0681-00			RES.,FXD,CMPSN:680 OHM,5%,0.25W	01121	CB6815
R893	315-0303-00			RES.,FXD,CMPSN:30K OHM,5%,0.25W	01121	CB3035
R894	315-0303-00			RES.,FXD,CMPSN:30K OHM,5%,0.25W	01121	CB3035
R895	315-0681-00			RES.,FXD,CMPSN:680 OHM,5%,0.25W	01121	CB6815
R896	315-0472-00			RES.,FXD,CMPSN:4.7K OHM,5%,0.25W	01121	CB4725
R897	315-0472-00			RES.,FXD,CMPSN:4.7K OHM,5%,0.25W	01121	CB4725
R898	315-0472-00			RES.,FXD,CMPSN:4.7K OHM,5%,0.25W	01121	CB4725
R941	315-0561-00			RES.,FXD,CMPSN:560 OHM,5%,0.25W	01121	CB5615
R942	315-0561-00			RES.,FXD,CMPSN:560 OHM,5%,0.25W	01121	CB5615
R943	315-0131-00			RES.,FXD,CMPSN:130 OHM,5%,0.25W	01121	CB1315
R944	315-0100-00			RES.,FXD,CMPSN:10 OHM,5%,0.25W	01121	CB1005
R949	322-0697-02			RES.,FXD,FILM:64.37K OHM,0.5%,0.25W	91637	MFF1421D64371D
R951	323-0510-00			RES.,FXD,FILM:2M OHM,1%,0.50W	75042	CECT0-2004F
R952	322-0696-00			RES.,FXD,FILM:129K OHM,1%,0.25W	91637	MFF1421G12902F
R953	322-0695-00			RES.,FXD,FILM:258K OHM,1%,0.25W	91637	MFF1421G25802F
R954	322-0694-00			RES.,FXD,FILM:517K OHM,1%,0.25W	91637	MFF1421G51702F
R955	322-0693-00			RES.,FXD,FILM:1.036M OHM,1%,0.25W	91637	MFF1421G10363F
R956	315-0100-00			RES.,FXD,CMPSN:10 OHM,5%,0.25W	01121	CB1005
R961	315-0101-00			RES.,FXD,CMPSN:100 OHM,5%,0.25W	01121	CB1015
R962	321-0374-00			RES.,FXD,FILM:76.8K OHM,1%,0.125W	91637	MFF1816G76801F
R963	321-0416-00			RES.,FXD,FILM:210K OHM,1%,0.125W	91637	MFF1816G21002F
R964	321-0374-00			RES.,FXD,FILM:76.8K OHM,1%,0.125W	91637	MFF1816G76801F
R965	315-0396-00			RES.,FXD,CMPSN:39M OHM,5%,0.25W	01121	CB3965
R971	322-0694-00			RES.,FXD,FILM:517K OHM,1%,0.25W	91637	MFF1421G51702F
R972	323-0510-00			RES.,FXD,FILM:2M OHM,1%,0.50W	75042	CECT0-2004F
R973	322-0695-00			RES.,FXD,FILM:258K OHM,1%,0.25W	91637	MFF1421G25802F
R974	322-0693-00			RES.,FXD,FILM:1.036M OHM,1%,0.25W	91637	MFF1421G10363F
R981	322-0696-00			RES.,FXD,FILM:129K OHM,1%,0.25W	91637	MFF1421G12902F
R982	322-0697-02			RES.,FXD,FILM:64.37K OHM,0.5%,0.25W	91637	MFF1421D64371D
R983	315-0473-00			RES.,FXD,CMPSN:47K OHM,5%,0.25W	01121	CB4735
R984	321-0269-00			RES.,FXD,FILM:6.19K OHM,1%,0.125W	91637	MFF1816G61900F
R985	321-0217-00			RES.,FXD,FILM:1.78K OHM,1%,0.125W	91637	MFF1816G17800F
R986	321-0234-00	B010151	B020520	RES.,FXD,FILM:2.67K OHM,1%,0.125W	91637	MFF1816G26700F
R986	321-0259-00	B020521		RES.,FXD,FILM:4.87K OHM,1%,0.125W	91637	MFF1816G48700F
R987	321-0281-00			RES.,FXD,FILM:8.25K OHM,1%,0.125W	91637	MFF1816G82500F
R988	321-0269-00			RES.,FXD,FILM:6.19K OHM,1%,0.125W	91637	MFF1816G61900F
R989	321-0217-00			RES.,FXD,FILM:1.78K OHM,1%,0.125W	91637	MFF1816G17800F
R990	315-0472-00			RES.,FXD,CMPSN:4.7K OHM,5%,0.25W	01121	CB4725
R991	321-0280-00			RES.,FXD,FILM:8.06K OHM,1%,0.125W	91637	MFF1816G80600F
R992	321-0251-00			RES.,FXD,FILM:4.02K OHM,1%,0.125W	91637	MFF1816G40200F
R993	321-0223-00			RES.,FXD,FILM:2.05K OHM,1%,0.125W	91637	MFF1816G20500F
R994	321-0234-00	B010151	B020520	RES.,FXD,FILM:2.67K OHM,1%,0.125W	91637	MFF1816G26700F
R994	321-0259-00	B020521		RES.,FXD,FILM:4.87K OHM,1%,0.125W	91637	MFF1816G48700F
R995	321-0281-00			RES.,FXD,FILM:8.25K OHM,1%,0.125W	91637	MFF1816G82500F
R996	315-0182-00			RES.,FXD,CMPSN:1.8K OHM,5%,0.25W	01121	CB1825
R998	315-0302-00			RES.,FXD,CMPSN:3K OHM,5%,0.25W	01121	CB3025
R999	315-0302-00			RES.,FXD,CMPSN:3K OHM,5%,0.25W	01121	CB3025
U21	156-0651-00			MICROCIRCUIT,DI:8-BIT PRL-OUT,SER SHF RGTR	01295	SN74LS164N
U61	156-0426-00			MICROCIRCUIT,DI:MICROPROCESSOR 6800	04713	MC6800L
U81	156-0600-00			MICROCIRCUIT,DI:QUAD BUS XCVR	04713	MC3441P
U91	156-0600-00			MICROCIRCUIT,DI:QUAD BUS XCVR	04713	MC3441P
U101	156-0323-00			MICROCIRCUIT,DI:HEX. INVERTER	01295	SN74S04N

Ckt No.	Tektronix Part No.	Serial/Model No. Eff	Dscont	Name & Description	Mfr Code	Mfr Part Number
U105	156-0481-00			MICROCIRCUIT,DI:TRIPLE 3-INPUT AND GATE	01295	SN74LS11N
U111	156-0472-00			MICROCIRCUIT,DI:13-INPUT NAND GATE	01295	SN74S133N
U115	156-0651-00			MICROCIRCUIT,DI:8-BIT PRL-OUT,SER SHF RGTR	01295	SN74LS164N
U121	156-0479-00			MICROCIRCUIT,DI:QUAD 2-INPUT OR GATE	01295	SN74LS32N
U125	156-0030-00			MICROCIRCUIT,DI:QUAD 2-INPUT POS NAND GATE	01295	SN7400N
U127	156-0382-00			MICROCIRCUIT,DI:QUAD 2-INPUT NAND GATE	01295	SN74LS00N
U135	156-0385-00			MICROCIRCUIT,DI:HEX.INVERTER	01295	SN74LS04N
U141	156-0403-00			MICROCIRCUIT,DI:HEX. INV W/OPEN COLL OUTPS	01295	SN74S05N
U153	156-0531-00			MICROCIRCUIT,DI:TRANSCEIVER	27014	DM8833N
U163	156-0531-00			MICROCIRCUIT,DI:TRANSCEIVER	27014	DM8833N
U181	156-0600-00			MICROCIRCUIT,DI:QUAD BUS XCVR	04713	MC3441P
U183	156-0535-00			MICROCIRCUIT,DI:TRI-STATE HEX BUFF	27014	DM8097M
U191	156-0600-00			MICROCIRCUIT,DI:QUAD BUS XCVR	04713	MC3441P
U193	156-0383-00			MICROCIRCUIT,DI:QUAD 2-INPUT NOR GATE	01295	SN74LS02N
U195	156-0479-00			MICROCIRCUIT,DI:QUAD 2-INPUT OR GATE	01295	SN74LS32N
U205	156-0469-00			MICROCIRCUIT,DI:3-LINE TO 8-LINE DECODER	01295	SN74LS138N
U211	156-0464-00			MICROCIRCUIT,DI:DUAL 4-INPUT NAND GATE	01295	SN74LS20N
U215	156-0466-00			MICROCIRCUIT,DI:QUAD 2-INPUT NAND BUFFER	01295	SN74LS37N
U217	156-0388-00			MICROCIRCUIT,DI:DUAL D-TYPE FLIP-FLOP	01295	SN74LS74N
U218	156-0530-00	XB020880		MICROCIRCUIT,DI:SEL/MULTIPLEXE,16 PIN DIP	80009	156-0530-00
U225	156-0634-00			MICROCIRCUIT,DI:CLK DRVR,4 CHAN,GATE CONT	04713	MC3460L
U227	307-0422-00			RES.,FXD,FILM:15 RES. NETWORK	73138	898-1-R242J
U231	156-0535-00			MICROCIRCUIT,DI:TRI-STATE HEX BUFF	27014	DM8097M
U235	156-0464-00			MICROCIRCUIT,DI:DUAL 4-INPUT NAND GATE	01295	SN74LS20N
U251	156-0535-00			MICROCIRCUIT,DI:TRI-STATE HEX BUFF	27014	DM8097M
U261	156-0535-00			MICROCIRCUIT,DI:TRI-STATE HEX BUFF	27014	DM8097M
U265	156-0427-00			MICROCIRCUIT,DI:PERIPHERAL INTERFACE ADPTR	80009	156-0427-00
U271	156-0385-00			MICROCIRCUIT,DI:HEX.INVERTER	01295	SN74LS04N
U281	156-0535-00			MICROCIRCUIT,DI:TRI-STATE HEX BUFF	27014	DM8097M
U285	156-0666-01			MICROCIRCUIT,DI:16K ROM,CUSTOM MASK	80009	156-0666-01
U291	156-0078-00			MICROCIRCUIT,DI:4 TO 16 LINE DECODER	01295	SN74154N
U295	156-0674-01	B010151	B030539	MICROCIRCUIT,DI:16K ROM,CUSTOM MASK	80009	156-0674-01
U295	156-0674-02	B030540		MICROCIRCUIT,DI:16K ROM,CUSTOM MASK	80009	156-0674-02
U311	156-0635-00			MICROCIRCUIT,DI:4096-BIT DYN RNDM ACS MEM	80009	156-0635-00
U321	156-0635-00			MICROCIRCUIT,DI:4096-BIT DYN RNDM ACS MEM	80009	156-0635-00
U331	156-0382-00			MICROCIRCUIT,DI:QUAD 2-INPUT NAND GATE	01295	SN74LS00N
U335	156-0646-00			MICROCIRCUIT,DI:4 BIT BINARY COUNTER	01295	SN74LS93N
U337	156-0646-00			MICROCIRCUIT,DI:4 BIT BINARY COUNTER	01295	SN74LS93N
U361	156-0427-00			MICROCIRCUIT,DI:PERIPHERAL INTERFACE ADPTR	80009	156-0427-00
U381	156-0665-01	B010151	B020262	MICROCIRCUIT,DI:2048 X 8 ROM	80009	156-0665-01
U381	156-0665-02	B020263		MICROCIRCUIT,DI:2048 X 8 ROM	04713	SCM6832L
U385	156-0664-01	B010151	B030539	MICROCIRCUIT,DI:16K ROM,CUSTOM MASK	80009	156-0664-01
U385	156-0664-02	B030540		MICROCIRCUIT,DI:16K ROM,CUSTOM MASK	80009	156-0664-02
U391	156-0673-01	B010151	B030539	MICROCIRCUIT,DI:16K ROM,CUSTOM MASK	80009	156-0673-01
U391	156-0673-02	B030540	B069999	MICROCIRCUIT,DI:16K ROM,CUSTOM MASK	80009	156-0673-02
U391	156-0673-03	B070000		MICROCIRCUIT,DI:16K ROM,CUSTOM MASK	80009	156-0673-03
U395	156-0672-01	B010151	B061590	MICROCIRCUIT,DI:16K ROM,CUSTOM MASK	80009	156-0672-01
U395	156-0672-02	B061591		MICROCIRCUIT,DI:2048 X 8 CUSTOM MASK ROM	80009	156-0672-02
U411	156-0635-00			MICROCIRCUIT,DI:4096-BIT DYN RNDM ACS MEM	80009	156-0635-00
U415	156-0635-00			MICROCIRCUIT,DI:4096-BIT DYN RNDM ACS MEM	80009	156-0635-00
U421	156-0635-00			MICROCIRCUIT,DI:4096-BIT DYN RNDM ACS MEM	80009	156-0635-00
U425	156-0635-00			MICROCIRCUIT,DI:4096-BIT DYN RNDM ACS MEM	80009	156-0635-00
U431	156-0530-00			MICROCIRCUIT,DI:SEL/MULTIPLEXE,16 PIN DIP	80009	156-0530-00

Ckt No.	Tektronix Part No.	Serial/Model No. Eff	Dscont	Name & Description	Mfr Code	Mfr Part Number
U435	156-0530-00			MICROCIRCUIT,DI:SEL/MULTIPLEXE,16 PIN DIP	80009	156-0530-00
U461	156-0427-00			MICROCIRCUIT,DI:PERIPHERAL INTERFACE ADPTR	80009	156-0427-00
U481	156-0663-01			MICROCIRCUIT,DI:16K ROM,CUSTOM MASK	80009	156-0663-01
U485	156-0662-01			MICROCIRCUIT,DI:16K ROM,CUSTOM MASK	80009	156-0662-01
U487	156-0661-01			MICROCIRCUIT,DI:16K ROM,CUSTOM MASK	80009	156-0661-01
U491	156-0671-01	B010151	B030539	MICROCIRCUIT,DI:16K ROM,CUSTOM MASK	80009	156-0671-01
U491	156-0671-02	B030540		MICROCIRCUIT,DI:16K ROM,CUSTOM MASK	80009	156-0671-02
U495	156-0670-01			MICROCIRCUIT,DI:16K ROM,CUSTOM MASK	80009	156-0670-01
U497	156-0669-01			MICROCIRCUIT,DI:16K ROM,CUSTOM MASK	80009	156-0669-01
U511	156-0635-00			MICROCIRCUIT,DI:4096-BIT DYN RNDM ACS MEM	80009	156-0635-00
U515	156-0635-00			MICROCIRCUIT,DI:4096-BIT DYN RNDM ACS MEM	80009	156-0635-00
U517	156-0635-00			MICROCIRCUIT,DI:4096-BIT DYN RNDM ACS MEM	80009	156-0635-00
U521	156-0635-00			MICROCIRCUIT,DI:4096-BIT DYN RNDM ACS MEM	80009	156-0635-00
U525	156-0635-00			MICROCIRCUIT,DI:4096-BIT DYN RNDM ACS MEM	80009	156-0635-00
U527	156-0635-00			MICROCIRCUIT,DI:4096-BIT DYN RNDM ACS MEM	80009	156-0635-00
U531	156-0702-00			MICROCIRCUIT,DI:3 STATE INVERTING HEX BFR	80009	156-0702-00
U535	307-0422-00			RES.,FXD,FILM:15 RES. NETWORK	73138	898-1-R242J
U537	156-0702-00			MICROCIRCUIT,DI:3 STATE INVERTING HEX BFR	80009	156-0702-00
U561	156-0427-00			MICROCIRCUIT,DI:PERIPHERAL INTERFACE ADPTR	80009	156-0427-00
U565	156-0427-00			MICROCIRCUIT,DI:PERIPHERAL INTERFACE ADPTR	80009	156-0427-00
U581	156-0660-01			MICROCIRCUIT,DI:16K ROM,CUSTOM MASK	80009	156-0660-01
U585	156-0659-01	B010151	B030539	MICROCIRCUIT,DI:16K ROM,CUSTOM MASK	80009	156-0659-01
U585	156-0659-02	B030540		MICROCIRCUIT,DI:16K ROM,CUSTOM MASK	80009	156-0659-02
U591	156-0668-01	B010151	B061590	MICROCIRCUIT,DI:16K ROM,CUSTOM MASK	80009	156-0668-01
U591	156-0668-02	B061591	B071882	MICROCIRCUIT,DI:ROM CUSTOM MASK	80009	156-0668-02
U591	156-0668-01	B071883		MICROCIRCUIT,DI:16K ROM,CUSTOM MASK	80009	156-0668-01
U595	156-0667-01	B010151	B030539	MICROCIRCUIT,DI:16K ROM,CUSTOM MASK	80009	156-0667-01
U595	156-0667-02	B030540		MICROCIRCUIT,DI:16K ROM,CUSTOM MASK	80009	156-0667-02
U611	156-0635-00			MICROCIRCUIT,DI:4096-BIT DYN RNDM ACS MEM	80009	156-0635-00
U615	156-0635-00			MICROCIRCUIT,DI:4096-BIT DYN RNDM ACS MEM	80009	156-0635-00
U621	156-0635-00			MICROCIRCUIT,DI:4096-BIT DYN RNDM ACS MEM	80009	156-0635-00
U625	156-0635-00			MICROCIRCUIT,DI:4096-BIT DYN RNDM ACS MEM	80009	156-0635-00
U655	156-0385-00			MICROCIRCUIT,DI:HEX.INVERTER	01295	SN74LS04N
U665	156-0385-00			MICROCIRCUIT,DI:HEX.INVERTER	01295	SN74LS04N
U671	156-0487-00			MICROCIRCUIT,LI:DUAL RETRIG,ONE SHOT	07263	96L02PC
U683	156-0402-00			MICROCIRCUIT,DI:TIMER	18324	NE555V
U693	156-0706-00			MICROCIRCUIT,DI:DUAL MONOSTABLE MV	01295	SN74221N
U711	156-0383-00			MICROCIRCUIT,DI:QUAD 2-INPUT NOR GATE	01295	SN74LS02N
U713	156-0388-00			MICROCIRCUIT,DI:DUAL D-TYPE FLIP-FLOP	01295	SN74LS74N
U715	156-0382-00			MICROCIRCUIT,DI:QUAD 2-INPUT NAND GATE	01295	SN74LS00N
U721	156-0385-00			MICROCIRCUIT,DI:HEX.INVERTER	01295	SN74LS04N
U751	156-0131-00			MICROCIRCUIT,DI:8-BIT SER TO PARALLEL SHF	01295	SN74164N
U755	156-0391-00			MICROCIRCUIT,DI:HEX LATCH WITH CLEAR	01295	SN74LS174N
U761	156-0146-00			MICROCIRCUIT,DI:8-BIT SHIFT REGISTER	01295	SN74165N
U765	156-0392-00			MICROCIRCUIT,DI:QUAD LATCH	01295	SN74LS175N
U771	156-0385-00			MICROCIRCUIT,DI:HEX.INVERTER	01295	SN74LS04N
U775	156-0391-00			MICROCIRCUIT,DI:HEX LATCH WITH CLEAR	01295	SN74LS174N
U781	156-0093-00			MICROCIRCUIT,DI:HEX.INVERTER	01295	SN7416N
U783	156-0383-00			MICROCIRCUIT,DI:QUAD 2-INPUT NOR GATE	01295	SN74LS02N
U785	156-0392-00			MICROCIRCUIT,DI:QUAD LATCH	01295	SN74LS175N
U791	156-0140-00			MICROCIRCUIT,DI:HEX BFR,15V,TTL	01295	SN7417N
U795	156-0382-00			MICROCIRCUIT,DI:QUAD 2-INPUT NAND GATE	01295	SN74LS00N
U811	156-0656-00			MICROCIRCUIT,DI:DECADE COUNTER	80009	156-0656-00

Ckt No.	Tektronix Part No.	Serial/Model No. Eff	Dscont	Name & Description	Mfr Code	Mfr Part Number
U815	156-0487-00			MICROCIRCUIT,LI:DUAL RETRIG,ONE SHOT	07263	96L02PC
U821	156-0656-00			MICROCIRCUIT,DI:DECADE COUNTER	80009	156-0656-00
U823	156-0656-00			MICROCIRCUIT,DI:DECADE COUNTER	80009	156-0656-00
U825	156-0656-00			MICROCIRCUIT,DI:DECADE COUNTER	80009	156-0656-00
U845	156-0093-00			MICROCIRCUIT,DI:HEX.INVERTER	01295	SN7416N
U855	156-0158-00			MICROCIRCUIT,LI:DUAL OPERATIONAL AMPLIFIER	80009	156-0158-00
U860	307-1054-00			RES.,NETWORK,TF:DIGITAL ANALOG CONVERTER	80009	307-1054-00
U875	156-0158-00			MICROCIRCUIT,LI:DUAL OPERATIONAL AMPLIFIER	80009	156-0158-00
U998	156-0013-00			MICROCIRCUIT,DI:DIFF COMPARATOR	07263	U5B7710393
U999	156-0013-00			MICROCIRCUIT,DI:DIFF COMPARATOR	07263	U5B7710393
VR517	152-0279-00			SEMICOND DEVICE:ZENER,0.4W,5.1V,5%	80009	152-0279-00
VR694	152-0279-00			SEMICOND DEVICE:ZENER,0.4W,5.1V,5%	80009	152-0279-00
Y1	158-0103-00			XTAL UNIT,QTZ:12.5MHZ,0.01% SERIES RESN	80009	158-0103-00
				A3 CKT BOARD ASSY:MEMORY ONE		
C1	283-0010-00			CAP.,FXD,CER DI:0.05UF,+100-20%,50V	56289	273C20
C2	283-0111-00			CAP.,FXD,CER DI:0.1UF,20%,50V	72982	8121-N088Z5U104M
C3	283-0010-00			CAP.,FXD,CER DI:0.05UF,+100-20%,50V	56289	273C20
C11	283-0010-00			CAP.,FXD,CER DI:0.05UF,+100-20%,50V	56289	273C20
C12	283-0111-00			CAP.,FXD,CER DI:0.1UF,20%,50V	72982	8121-N088Z5U104M
C21	283-0010-00			CAP.,FXD,CER DI:0.05UF,+100-20%,50V	56289	273C20
C22	283-0111-00			CAP.,FXD,CER DI:0.1UF,20%,50V	72982	8121-N088Z5U104M
C31	283-0010-00			CAP.,FXD,CER DI:0.05UF,+100-20%,50V	56289	273C20
C32	283-0111-00			CAP.,FXD,CER DI:0.1UF,20%,50V	72982	8121-N088Z5U104M
C41	283-0010-00			CAP.,FXD,CER DI:0.05UF,+100-20%,50V	56289	273C20
C42	283-0111-00			CAP.,FXD,CER DI:0.1UF,20%,50V	72982	8121-N088Z5U104M
C51	283-0010-00			CAP.,FXD,CER DI:0.05UF,+100-20%,50V	56289	273C20
C52	283-0111-00			CAP.,FXD,CER DI:0.1UF,20%,50V	72982	8121-N088Z5U104M
C61	283-0010-00			CAP.,FXD,CER DI:0.05UF,+100-20%,50V	56289	273C20
C62	283-0111-00			CAP.,FXD,CER DI:0.1UF,20%,50V	72982	8121-N088Z5U104M
C81	283-0203-00			CAP.,FXD,CER DI:0.47UF,20%,50V	72982	8131N075 E474M
C101	283-0010-00			CAP.,FXD,CER DI:0.05UF,+100-20%,50V	56289	273C20
C102	283-0111-00			CAP.,FXD,CER DI:0.1UF,20%,50V	72982	8121-N088Z5U104M
C103	283-0010-00			CAP.,FXD,CER DI:0.05UF,+100-20%,50V	56289	273C20
C111	283-0010-00			CAP.,FXD,CER DI:0.05UF,+100-20%,50V	56289	273C20
C112	283-0111-00			CAP.,FXD,CER DI:0.1UF,20%,50V	72982	8121-N088Z5U104M
C121	283-0010-00			CAP.,FXD,CER DI:0.05UF,+100-20%,50V	56289	273C20
C122	283-0111-00			CAP.,FXD,CER DI:0.1UF,20%,50V	72982	8121-N088Z5U104M
C131	283-0010-00			CAP.,FXD,CER DI:0.05UF,+100-20%,50V	56289	273C20
C132	283-0111-00			CAP.,FXD,CER DI:0.1UF,20%,50V	72982	8121-N088Z5U104M
C141	283-0010-00			CAP.,FXD,CER DI:0.05UF,+100-20%,50V	56289	273C20
C142	283-0111-00			CAP.,FXD,CER DI:0.1UF,20%,50V	72982	8121-N088Z5U104M
C151	283-0010-00			CAP.,FXD,CER DI:0.05UF,+100-20%,50V	56289	273C20
C152	283-0111-00			CAP.,FXD,CER DI:0.1UF,20%,50V	72982	8121-N088Z5U104M
C161	283-0010-00			CAP.,FXD,CER DI:0.05UF,+100-20%,50V	56289	273C20
C162	283-0111-00			CAP.,FXD,CER DI:0.1UF,20%,50V	72982	8121-N088Z5U104M
C171	283-0203-00			CAP.,FXD,CER DI:0.47UF,20%,50V	72982	8131N075 E474M
C201	283-0010-00			CAP.,FXD,CER DI:0.05UF,+100-20%,50V	56289	273C20
C202	283-0111-00			CAP.,FXD,CER DI:0.1UF,20%,50V	72982	8121-N088Z5U104M

Ckt No.	Tektronix Part No.	Serial/Model No. Eff	Dscont	Name & Description	Mfr Code	Mfr Part Number
C203	283-0010-00			CAP.,FXD,CER DI:0.05UF,+100-20%,50V	56289	273C20
C211	283-0010-00			CAP.,FXD,CER DI:0.05UF,+100-20%,50V	56289	273C20
C212	283-0111-00			CAP.,FXD,CER DI:0.1UF,20%,50V	72982	8121-N088Z5U104M
C221	283-0010-00			CAP.,FXD,CER DI:0.05UF,+100-20%,50V	56289	273C20
C222	283-0111-00			CAP.,FXD,CER DI:0.1UF,20%,50V	72982	8121-N088Z5U104M
C231	283-0010-00			CAP.,FXD,CER DI:0.05UF,+100-20%,50V	56289	273C20
C232	283-0111-00			CAP.,FXD,CER DI:0.1UF,20%,50V	72982	8121-N088Z5U104M
C241	283-0010-00			CAP.,FXD,CER DI:0.05UF,+100-20%,50V	56289	273C20
C242	283-0111-00			CAP.,FXD,CER DI:0.1UF,20%,50V	72982	8121-N088Z5U104M
C251	283-0010-00			CAP.,FXD,CER DI:0.05UF,+100-20%,50V	56289	273C20
C252	283-0111-00			CAP.,FXD,CER DI:0.1UF,20%,50V	72982	8121-N088Z5U104M
C261	283-0010-00			CAP.,FXD,CER DI:0.05UF,+100-20%,50V	56289	273C20
C262	283-0111-00			CAP.,FXD,CER DI:0.1UF,20%,50V	72982	8121-N088Z5U104M
C271	283-0203-00			CAP.,FXD,CER DI:0.47UF,20%,50V	72982	8131N075 E474M
C301	283-0010-00			CAP.,FXD,CER DI:0.05UF,+100-20%,50V	56289	273C20
C302	283-0111-00			CAP.,FXD,CER DI:0.1UF,20%,50V	72982	8121-N088Z5U104M
C303	283-0010-00			CAP.,FXD,CER DI:0.05UF,+100-20%,50V	56289	273C20
C311	283-0010-00			CAP.,FXD,CER DI:0.05UF,+100-20%,50V	56289	273C20
C312	283-0111-00			CAP.,FXD,CER DI:0.1UF,20%,50V	72982	8121-N088Z5U104M
C321	283-0010-00			CAP.,FXD,CER DI:0.05UF,+100-20%,50V	56289	273C20
C322	283-0111-00			CAP.,FXD,CER DI:0.1UF,20%,50V	72982	8121-N088Z5U104M
C331	283-0010-00			CAP.,FXD,CER DI:0.05UF,+100-20%,50V	56289	273C20
C332	283-0111-00			CAP.,FXD,CER DI:0.1UF,20%,50V	72982	8121-N088Z5U104M
C341	283-0010-00			CAP.,FXD,CER DI:0.05UF,+100-20%,50V	56289	273C20
C342	283-0111-00			CAP.,FXD,CER DI:0.1UF,20%,50V	72982	8121-N088Z5U104M
C351	283-0010-00			CAP.,FXD,CER DI:0.05UF,+100-20%,50V	56289	273C20
C352	283-0111-00			CAP.,FXD,CER DI:0.1UF,20%,50V	72982	8121-N088Z5U104M
C361	283-0010-00			CAP.,FXD,CER DI:0.05UF,+100-20%,50V	56289	273C20
C362	283-0111-00			CAP.,FXD,CER DI:0.1UF,20%,50V	72982	8121-N088Z5U104M
C371	283-0203-00			CAP.,FXD,CER DI:0.47UF,20%,50V	72982	8131N075 E474M
C401	283-0010-00			CAP.,FXD,CER DI:0.05UF,+100-20%,50V	56289	273C20
C402	283-0111-00			CAP.,FXD,CER DI:0.1UF,20%,50V	72982	8121-N088Z5U104M
C403	283-0010-00			CAP.,FXD,CER DI:0.05UF,+100-20%,50V	56289	273C20
C411	283-0010-00			CAP.,FXD,CER DI:0.05UF,+100-20%,50V	56289	273C20
C412	283-0111-00			CAP.,FXD,CER DI:0.1UF,20%,50V	72982	8121-N088Z5U104M
C421	283-0010-00			CAP.,FXD,CER DI:0.05UF,+100-20%,50V	56289	273C20
C422	283-0111-00			CAP.,FXD,CER DI:0.1UF,20%,50V	72982	8121-N088Z5U104M
C431	283-0010-00			CAP.,FXD,CER DI:0.05UF,+100-20%,50V	56289	273C20
C432	283-0111-00			CAP.,FXD,CER DI:0.1UF,20%,50V	72982	8121-N088Z5U104M
C441	283-0010-00			CAP.,FXD,CER DI:0.05UF,+100-20%,50V	56289	273C20
C442	283-0111-00			CAP.,FXD,CER DI:0.1UF,20%,50V	72982	8121-N088Z5U104M
C451	283-0010-00			CAP.,FXD,CER DI:0.05UF,+100-20%,50V	56289	273C20
C452	283-0111-00			CAP.,FXD,CER DI:0.1UF,20%,50V	72982	8121-N088Z5U104M
C461	283-0010-00			CAP.,FXD,CER DI:0.05UF,+100-20%,50V	56289	273C20
C462	283-0111-00			CAP.,FXD,CER DI:0.1UF,20%,50V	72982	8121-N088Z5U104M
C471	290-0517-00			CAP.,FXD,ELCTLT:6.8UF,20%,35V	56289	196D685X0035KA1
C472	290-0517-00			CAP.,FXD,ELCTLT:6.8UF,20%,35V	56289	196D685X0035KA1
C474	283-0203-00			CAP.,FXD,CER DI:0.47UF,20%,50V	72982	8131N075 E474M
C501	283-0010-00			CAP.,FXD,CER DI:0.05UF,+100-20%,50V	56289	273C20
C502	283-0111-00			CAP.,FXD,CER DI:0.1UF,20%,50V	72982	8121-N088Z5U104M
C503	283-0010-00			CAP.,FXD,CER DI:0.05UF,+100-20%,50V	56289	273C20
C511	283-0010-00			CAP.,FXD,CER DI:0.05UF,+100-20%,50V	56289	273C20
C512	283-0111-00			CAP.,FXD,CER DI:0.1UF,20%,50V	72982	8121-N088Z5U104M

Ckt No.	Tektronix Part No.	Serial/Model No. Eff	Dscont	Name & Description	Mfr Code	Mfr Part Number
C521	283-0010-00			CAP.,FXD,CER DI:0.05UF,+100-20%,50V	56289	273C20
C522	283-0111-00			CAP.,FXD,CER DI:0.1UF,20%,50V	72982	8121-N088Z5U104M
C531	283-0010-00			CAP.,FXD,CER DI:0.05UF,+100-20%,50V	56289	273C20
C532	283-0111-00			CAP.,FXD,CER DI:0.1UF,20%,50V	72982	8121-N088Z5U104M
C541	283-0010-00			CAP.,FXD,CER DI:0.05UF,+100-20%,50V	56289	273C20
C542	283-0111-00			CAP.,FXD,CER DI:0.1UF,20%,50V	72982	8121-N088Z5U104M
C551	283-0010-00			CAP.,FXD,CER DI:0.05UF,+100-20%,50V	56289	273C20
C552	283-0111-00			CAP.,FXD,CER DI:0.1UF,20%,50V	72982	8121-N088Z5U104M
C561	283-0010-00			CAP.,FXD,CER DI:0.05UF,+100-20%,50V	56289	273C20
C562	283-0111-00			CAP.,FXD,CER DI:0.1UF,20%,50V	72982	8121-N088Z5U104M
C571	283-0203-00			CAP.,FXD,CER DI:0.47UF,20%,50V	72982	8131N075 E474M
C581	290-0517-00			CAP.,FXD,ELCTLT:6.8UF,20%,35V	56289	196D685X0035KA1
R41	315-0200-00			RES.,FXD,CMPSN:20 OHM,5%,0.25W	01121	CB2005
R81	315-0200-00			RES.,FXD,CMPSN:20 OHM,5%,0.25W	01121	CB2005
R83	315-0200-00			RES.,FXD,CMPSN:20 OHM,5%,0.25W	01121	CB2005
R85	315-0200-00			RES.,FXD,CMPSN:20 OHM,5%,0.25W	01121	CB2005
R87	315-0101-00			RES.,FXD,CMPSN:100 OHM,5%,0.25W	01121	CB1015
R89	315-0101-00			RES.,FXD,CMPSN:100 OHM,5%,0.25W	01121	CB1015
R141	315-0200-00			RES.,FXD,CMPSN:20 OHM,5%,0.25W	01121	CB2005
R173	315-0101-00			RES.,FXD,CMPSN:100 OHM,5%,0.25W	01121	CB1015
R175	315-0101-00			RES.,FXD,CMPSN:100 OHM,5%,0.25W	01121	CB1015
R179	315-0101-00			RES.,FXD,CMPSN:100 OHM,5%,0.25W	01121	CB1015
R241	315-0200-00			RES.,FXD,CMPSN:20 OHM,5%,0.25W	01121	CB2005
R271	315-0101-00			RES.,FXD,CMPSN:100 OHM,5%,0.25W	01121	CB1015
R273	315-0101-00			RES.,FXD,CMPSN:100 OHM,5%,0.25W	01121	CB1015
R276	315-0101-00			RES.,FXD,CMPSN:100 OHM,5%,0.25W	01121	CB1015
R278	315-0101-00			RES.,FXD,CMPSN:100 OHM,5%,0.25W	01121	CB1015
R279	315-0101-00			RES.,FXD,CMPSN:100 OHM,5%,0.25W	01121	CB1015
R341	315-0200-00			RES.,FXD,CMPSN:20 OHM,5%,0.25W	01121	CB2005
R371	315-0101-00			RES.,FXD,CMPSN:100 OHM,5%,0.25W	01121	CB1015
R372	315-0101-00			RES.,FXD,CMPSN:100 OHM,5%,0.25W	01121	CB1015
R373	315-0101-00			RES.,FXD,CMPSN:100 OHM,5%,0.25W	01121	CB1015
R379	315-0101-00			RES.,FXD,CMPSN:100 OHM,5%,0.25W	01121	CB1015
R441	315-0200-00			RES.,FXD,CMPSN:20 OHM,5%,0.25W	01121	CB2005
R471	315-0471-00			RES.,FXD,CMPSN:470 OHM,5%,0.25W	01121	CB4715
R472	315-0200-00			RES.,FXD,CMPSN:20 OHM,5%,0.25W	01121	CB2005
R541	315-0200-00			RES.,FXD,CMPSN:20 OHM,5%,0.25W	01121	CB2005
R571	315-0200-00			RES.,FXD,CMPSN:20 OHM,5%,0.25W	01121	CB2005
R581	315-0200-00			RES.,FXD,CMPSN:20 OHM,5%,0.25W	01121	CB2005
U1[1]	156-0635-00			MICROCIRCUIT,DI:4096-BIT DYN RNDM ACS MEM	80009	156-0635-00
U11[1]	156-0635-00			MICROCIRCUIT,DI:4096-BIT DYN RNDM ACS MEM	80009	156-0635-00
U21[1]	156-0635-00			MICROCIRCUIT,DI:4096-BIT DYN RNDM ACS MEM	80009	156-0635-00
U31[1]	156-0635-00			MICROCIRCUIT,DI:4096-BIT DYN RNDM ACS MEM	80009	156-0635-00
U41[1]	156-0635-00			MICROCIRCUIT,DI:4096-BIT DYN RNDM ACS MEM	80009	156-0635-00
U51[1]	156-0635-00			MICROCIRCUIT,DI:4096-BIT DYN RNDM ACS MEM	80009	156-0635-00
U61[1]	156-0635-00			MICROCIRCUIT,DI:4096-BIT DYN RNDM ACS MEM	80009	156-0635-00
U71[1]	156-0635-00			MICROCIRCUIT,DI:4096-BIT DYN RNDM ACS MEM	80009	156-0635-00
U81[1]	156-0634-00			MICROCIRCUIT,DI:CLK DRVR,4 CHAN,GATE CONT	04713	MC3460L
U101[1]	156-0635-00			MICROCIRCUIT,DI:4096-BIT DYN RNDM ACS MEM	80009	156-0635-00
U111[1]	156-0635-00			MICROCIRCUIT,DI:4096-BIT DYN RNDM ACS MEM	80009	156-0635-00
U121[1]	156-0635-00			MICROCIRCUIT,DI:4096-BIT DYN RNDM ACS MEM	80009	156-0635-00
U131[1]	156-0635-00			MICROCIRCUIT,DI:4096-BIT DYN RNDM ACS MEM	80009	156-0635-00

[1]On 670-4004-03 boards only.

Ckt No.	Tektronix Part No.	Serial/Model No. Eff	Dscont	Name & Description	Mfr Code	Mfr Part Number
U141[1]	156-0635-00			MICROCIRCUIT,DI:4096-BIT DYN RNDM ACS MEM	80009	156-0635-00
U151[1]	156-0635-00			MICROCIRCUIT,DI:4096-BIT DYN RNDM ACS MEM	80009	156-0635-00
U161[1]	156-0635-00			MICROCIRCUIT,DI:4096-BIT DYN RNDM ACS MEM	80009	156-0635-00
U171[1]	156-0635-00			MICROCIRCUIT,DI:4096-BIT DYN RNDM ACS MEM	80009	156-0635-00
U201[2]	156-0635-00			MICROCIRCUIT,DI:4096-BIT DYN RNDM ACS MEM	80009	156-0635-00
U211[2]	156-0635-00			MICROCIRCUIT,DI:4096-BIT DYN RNDM ACS MEM	80009	156-0635-00
U221[2]	156-0635-00			MICROCIRCUIT,DI:4096-BIT DYN RNDM ACS MEM	80009	156-0635-00
U231[2]	156-0635-00			MICROCIRCUIT,DI:4096-BIT DYN RNDM ACS MEM	80009	156-0635-00
U241[2]	156-0635-00			MICROCIRCUIT,DI:4096-BIT DYN RNDM ACS MEM	80009	156-0635-00
U251[2]	156-0635-00			MICROCIRCUIT,DI:4096-BIT DYN RNDM ACS MEM	80009	156-0635-00
U261[2]	156-0635-00			MICROCIRCUIT,DI:4096-BIT DYN RNDM ACS MEM	80009	156-0635-00
U271[2]	156-0635-00			MICROCIRCUIT,DI:4096-BIT DYN RNDM ACS MEM	80009	156-0635-00
U301[2]	156-0635-00			MICROCIRCUIT,DI:4096-BIT DYN RNDM ACS MEM	80009	156-0635-00
U311[2]	156-0635-00			MICROCIRCUIT,DI:4096-BIT DYN RNDM ACS MEM	80009	156-0635-00
U321[2]	156-0635-00			MICROCIRCUIT,DI:4096-BIT DYN RNDM ACS MEM	80009	156-0635-00
U331[2]	156-0635-00			MICROCIRCUIT,DI:4096-BIT DYN RNDM ACS MEM	80009	156-0635-00
U341[2]	156-0635-00			MICROCIRCUIT,DI:4096-BIT DYN RNDM ACS MEM	80009	156-0635-00
U351[2]	156-0635-00			MICROCIRCUIT,DI:4096-BIT DYN RNDM ACS MEM	80009	156-0635-00
U361[2]	156-0635-00			MICROCIRCUIT,DI:4096-BIT DYN RNDM ACS MEM	80009	156-0635-00
U371[2]	156-0635-00			MICROCIRCUIT,DI:4096-BIT DYN RNDM ACS MEM	80009	156-0635-00
U401[3]	156-0635-00			MICROCIRCUIT,DI:4096-BIT DYN RNDM ACS MEM	80009	156-0635-00
U411[3]	156-0635-00			MICROCIRCUIT,DI:4096-BIT DYN RNDM ACS MEM	80009	156-0635-00
U421[3]	156-0635-00			MICROCIRCUIT,DI:4096-BIT DYN RNDM ACS MEM	80009	156-0635-00
U431[3]	156-0635-00			MICROCIRCUIT,DI:4096-BIT DYN RNDM ACS MEM	80009	156-0635-00
U441[3]	156-0635-00			MICROCIRCUIT,DI:4096-BIT DYN RNDM ACS MEM	80009	156-0635-00
U451[3]	156-0635-00			MICROCIRCUIT,DI:4096-BIT DYN RNDM ACS MEM	80009	156-0635-00
U461[3]	156-0635-00			MICROCIRCUIT,DI:4096-BIT DYN RNDM ACS MEM	80009	156-0635-00
U471[3]	156-0635-00			MICROCIRCUIT,DI:4096-BIT DYN RNDM ACS MEM	80009	156-0635-00
U501[3]	156-0635-00			MICROCIRCUIT,DI:4096-BIT DYN RNDM ACS MEM	80009	156-0635-00
U511[3]	156-0635-00			MICROCIRCUIT,DI:4096-BIT DYN RNDM ACS MEM	80009	156-0635-00
U521[3]	156-0635-00			MICROCIRCUIT,DI:4096-BIT DYN RNDM ACS MEM	80009	156-0635-00
U531[3]	156-0635-00			MICROCIRCUIT,DI:4096-BIT DYN RNDM ACS MEM	80009	156-0635-00
U541[3]	156-0635-00			MICROCIRCUIT,DI:4096-BIT DYN RNDM ACS MEM	80009	156-0635-00
U551[3]	156-0635-00			MICROCIRCUIT,DI:4096-BIT DYN RNDM ACS MEM	80009	156-0635-00
U561[3]	156-0635-00			MICROCIRCUIT,DI:4096-BIT DYN RNDM ACS MEM	80009	156-0635-00
U571[3]	156-0635-00			MICROCIRCUIT,DI:4096-BIT DYN RNDM ACS MEM	80009	156-0635-00
U581[3]	156-0634-00			MICROCIRCUIT,DI:CLK DRVR,4 CHAN,GATE CONT	04713	MC3460L
VR471	152-0279-00			SEMICOND DEVICE:ZENER,0.4W,5.1V,5%	80009	152-0279-00

A4 CKT BOARD ASSY:DISPLAY
(672-0546-03 - 672-0546-04)

C11	283-0033-00			CAP.,FXD,CER DI:0.001UF,6000V	72982	3906BW200E102P
C12	283-0101-00			CAP.,FXD,CER DI:4700PF,+80-20%,6000V	56289	45C11A
C23	283-0008-00			CAP.,FXD,CER DI:0.1UF,500V	56289	275C8
C25	283-0008-00			CAP.,FXD,CER DI:0.1UF,500V	56289	275C8
C29	281-0523-00			CAP.,FXD,CER DI:100PF,+/-20PF,500V	72982	301-000U2M0101M
C44	283-0068-00			CAP.,FXD,CER DI:0.01UF,+100-0%,500V	56289	19C241

[1]On 670-4004-03 boards only.
[2]On 670-4004-02 and -03 boards only.
[3]On 670-4004-01, -02 and -03 boards.

Ckt No.	Tektronix Part No.	Serial/Model No. Eff	Dscont	Name & Description	Mfr Code	Mfr Part Number
C62	281-0550-00			CAP.,FXD,CER DI:120PF,10%,500V	04222	7001-1373
C64	283-0068-00			CAP.,FXD,CER DI:0.01UF,+100-0%,500V	56289	19C241
C86	283-0092-00			CAP.,FXD,CER DI:0.03UF,+80-20%,200V	72982	845-534E303Z
C96	283-0092-00			CAP.,FXD,CER DI:0.03UF,+80-20%,200V	72982	845-534E303Z
C110	283-0101-00			CAP.,FXD,CER DI:4700PF,+80-20%,6000V	56289	45C11A
C113	283-0101-00			CAP.,FXD,CER DI:4700PF,+80-20%,6000V	56289	45C11A
C136	283-0008-00			CAP.,FXD,CER DI:0.1UF,500V	56289	275C8
C147	283-0068-00			CAP.,FXD,CER DI:0.01UF,+100-0%,500V	56289	19C241
C148	281-0523-00			CAP.,FXD,CER DI:100PF,+/-20PF,500V	72982	301-000U2M0101M
C151	283-0177-00			CAP.,FXD,CER DI:1UF,+80-20%,25V	72982	8131N039 E 105Z
C158	283-0008-00			CAP.,FXD,CER DI:0.1UF,500V	56289	275C8
C159	283-0008-00			CAP.,FXD,CER DI:0.1UF,500V	56289	275C8
C175	281-0605-00			CAP.,FXD,CER DI:200PF,10%,500V	04222	7001-1375
C177	281-0605-00			CAP.,FXD,CER DI:200PF,10%,500V	04222	7001-1375
C189	283-0068-00			CAP.,FXD,CER DI:0.01UF,+100-0%,500V	56289	19C241
C190	283-0068-00			CAP.,FXD,CER DI:0.01UF,+100-0%,500V	56289	19C241
C196	290-0525-00			CAP.,FXD,ELCTLT:4.7UF,20%,50V	56289	196D475X0050KA1
C213	283-0291-00			CAP.,FXD,CER DI:25PF,10%,6000V	56289	41C426
C214	283-0162-00			CAP.,FXD,CER DI:0.01UF,+80-30%,5000V	56289	112C403
C215	283-0101-00			CAP.,FXD,CER DI:4700PF,+80-20%,6000V	56289	45C11A
C222	283-0177-00			CAP.,FXD,CER DI:1UF,+80-20%,25V	72982	8131N039 E 105Z
C228	283-0068-00			CAP.,FXD,CER DI:0.01UF,+100-0%,500V	56289	19C241
C232	283-0068-00			CAP.,FXD,CER DI:0.01UF,+100-0%,500V	56289	19C241
C243	283-0000-00			CAP.,FXD,CER DI:0.001UF,+100-0%,500V	72982	831-516E102P
C244	283-0068-00			CAP.,FXD,CER DI:0.01UF,+100-0%,500V	56289	19C241
C255	281-0623-00			CAP.,FXD,CER DI:650PF,5%,500V	04222	7001-1362
C257	281-0623-00			CAP.,FXD,CER DI:650PF,5%,500V	04222	7001-1362
C258	283-0177-00			CAP.,FXD,CER DI:1UF,+80-20%,25V	72982	8131N039 E 105Z
C259	283-0177-00			CAP.,FXD,CER DI:1UF,+80-20%,25V	72982	8131N039 E 105Z
C286	281-0605-00			CAP.,FXD,CER DI:200PF,10%,500V	04222	7001-1375
C291	281-0605-00			CAP.,FXD,CER DI:200PF,10%,500V	04222	7001-1375
C311	283-0021-00			CAP.,FXD,CER DI:0.001UF,20%,5000V	72982	848-556-Y5S-102M
C312	283-0021-00			CAP.,FXD,CER DI:0.001UF,20%,5000V	72982	848-556-Y5S-102M
C325	283-0067-00			CAP.,FXD,CER DI:0.001UF,10%,200V	72982	835-515B102K
C333	281-0525-00			CAP.,FXD,CER DI:470PF,+/-94PF,500V	04222	7001-1364
C334	283-0177-00			CAP.,FXD,CER DI:1UF,+80-20%,25V	72982	8131N039 E 105Z
C342	281-0504-00			CAP.,FXD,CER DI:10PF,+/-1PF,500V	72982	301-055C0G0100F
C343	281-0604-00			CAP.,FXD,CER DI:2.2PF,+/-0.25PF,500V	72982	301-000C0J0229C
C353	290-0301-00			CAP.,FXD,ELCTLT:10UF,10%,20V	56289	150D106X9020B2
C363	283-0000-00			CAP.,FXD,CER DI:0.001UF,+100-0%,500V	72982	831-516E102P
C364	283-0000-00			CAP.,FXD,CER DI:0.001UF,+100-0%,500V	72982	831-516E102P
C370	290-0260-00			CAP.,FXD,ELCTLT:50UF,+75-10%,200V	56289	34D506G200GL4
C427	283-0067-00			CAP.,FXD,CER DI:0.001UF,10%,200V	72982	835-515B102K
C432	283-0177-00			CAP.,FXD,CER DI:1UF,+80-20%,25V	72982	8131N039 E 105Z
C435	290-0316-00			CAP.,FXD,ELCTLT:47UF,20%,35V	56289	150D476X0035S2
C437	283-0111-00			CAP.,FXD,CER DI:0.1UF,20%,50V	72982	8121-N088Z5U104M
C439	283-0111-00			CAP.,FXD,CER DI:0.1UF,20%,50V	72982	8121-N088Z5U104M
C459	290-0534-00			CAP.,FXD,ELCTLT:1UF,20%,35V	56289	196D105X0035HA1
C466	281-0549-00			CAP.,FXD,CER DI:68PF,10%,500V	72982	301-000U2J0680K
C468	290-0297-00			CAP.,FXD,ELCTLT:39UF,10%,10V	56289	150D396X9010B2
C545	283-0081-00			CAP.,FXD,CER DI:0.1UF,+80-20%,25V	56289	36C600
C650	283-0177-00			CAP.,FXD,CER DI:1UF,+80-20%,25V	72982	8131N039 E 105Z
C659	281-0622-00			CAP.,FXD,CER DI:47PF,1%,500V	72982	308-000C0G0470F

Ckt No.	Tektronix Part No.	Serial/Model No. Eff	Dscont	Name & Description	Mfr Code	Mfr Part Number
C664	283-0000-00			CAP.,FXD,CER DI:0.001UF,+100-0%,500V	72982	831-516E102P
C668	290-0517-00			CAP.,FXD,ELCTLT:6.8UF,20%,35V	56289	196D685X0035KA1
C669	290-0517-00			CAP.,FXD,ELCTLT:6.8UF,20%,35V	56289	196D685X0035KA1
C671	290-0536-00			CAP.,FXD,ELCTLT:10UF,20%,25V	90201	TDC106M025FL
C672	290-0536-00			CAP.,FXD,ELCTLT:10UF,20%,25V	90201	TDC106M025FL
CR4	152-0426-00			SEMICOND DEVICE:SILICON,400V,400MA	01295	G2017-1
CR20	152-0426-00			SEMICOND DEVICE:SILICON,400V,400MA	01295	G2017-1
CR21	152-0061-00			SEMICOND DEVICE:SILICON,175V,100MA	80009	152-0061-00
CR22	152-0061-00			SEMICOND DEVICE:SILICON,175V,100MA	80009	152-0061-00
CR23	152-0066-01			SEMICOND DEVICE:SILICON,400V,1A	80009	152-0066-01
CR24	152-0400-00			SEMICOND DEVICE:SILICON,400V,1A	80009	152-0400-00
CR40	152-0066-01	XB051379		SEMICOND DEVICE:SILICON,400V,1A	80009	152-0066-01
CR45	152-0141-02			SEMICOND DEVICE:SILICON,30V,150MA	07910	1N4152
CR59	152-0141-02			SEMICOND DEVICE:SILICON,30V,150MA	07910	1N4152
CR67	152-0141-02			SEMICOND DEVICE:SILICON,30V,150MA	07910	1N4152
CR81	152-0141-02			SEMICOND DEVICE:SILICON,30V,150MA	07910	1N4152
CR82	152-0141-02			SEMICOND DEVICE:SILICON,30V,150MA	07910	1N4152
CR91	152-0141-02			SEMICOND DEVICE:SILICON,30V,150MA	07910	1N4152
CR92	152-0141-02			SEMICOND DEVICE:SILICON,30V,150MA	07910	1N4152
CR103	152-0426-00			SEMICOND DEVICE:SILICON,400V,400MA	01295	G2017-1
CR121	152-0061-00			SEMICOND DEVICE:SILICON,175V,100MA	80009	152-0061-00
CR122	152-0141-02			SEMICOND DEVICE:SILICON,30V,150MA	07910	1N4152
CR128	152-0066-01			SEMICOND DEVICE:SILICON,400V,1A	80009	152-0066-01
CR169	152-0040-00			SEMICOND DEVICE:SILICON,600V,1A	80009	152-0040-00
CR203	152-0408-00			SEMICOND DEVICE:SILICON,10KV,5MA	83003	H345
CR204	152-0408-00			SEMICOND DEVICE:SILICON,10KV,5MA	83003	H345
CR264	152-0107-00			SEMICOND DEVICE:SILICON,400V,400MA	80009	152-0107-00
CR311	152-0429-00			SEMICOND DEVICE:SILICON,5000V,10MA	14099	SA3282
CR312	152-0429-00			SEMICOND DEVICE:SILICON,5000V,10MA	14099	SA3282
CR327	152-0141-02			SEMICOND DEVICE:SILICON,30V,150MA	07910	1N4152
CR328	152-0141-02			SEMICOND DEVICE:SILICON,30V,150MA	07910	1N4152
CR350	152-0141-02			SEMICOND DEVICE:SILICON,30V,150MA	07910	1N4152
CR395	152-0141-02			SEMICOND DEVICE:SILICON,30V,150MA	07910	1N4152
CR396	152-0141-02			SEMICOND DEVICE:SILICON,30V,150MA	07910	1N4152
CR397	152-0141-02			SEMICOND DEVICE:SILICON,30V,150MA	07910	1N4152
CR398	152-0141-02			SEMICOND DEVICE:SILICON,30V,150MA	07910	1N4152
CR429	152-0412-00			SEMICOND DEVICE:SILICON,50V,3A	80009	152-0412-00
CR432	152-0333-00			SEMICOND DEVICE:SILICON,55V,200MA	80009	152-0333-00
CR450	152-0141-02			SEMICOND DEVICE:SILICON,30V,150MA	07910	1N4152
CR475	152-0141-02			SEMICOND DEVICE:SILICON,30V,150MA	07910	1N4152
CR476	152-0141-02			SEMICOND DEVICE:SILICON,30V,150MA	07910	1N4152
CR497	152-0141-02			SEMICOND DEVICE:SILICON,30V,150MA	07910	1N4152
CR575	152-0141-02			SEMICOND DEVICE:SILICON,30V,150MA	07910	1N4152
CR586	152-0141-02			SEMICOND DEVICE:SILICON,30V,150MA	07910	1N4152
CR593	152-0141-02			SEMICOND DEVICE:SILICON,30V,150MA	07910	1N4152
CR596	152-0141-02			SEMICOND DEVICE:SILICON,30V,150MA	07910	1N4152
CR597	152-0141-02			SEMICOND DEVICE:SILICON,30V,150MA	07910	1N4152
CR677	152-0141-02			SEMICOND DEVICE:SILICON,30V,150MA	07910	1N4152
CR678	152-0141-02			SEMICOND DEVICE:SILICON,30V,150MA	07910	1N4152
CR775	152-0141-02			SEMICOND DEVICE:SILICON,30V,150MA	07910	1N4152
CR781	152-0141-02			SEMICOND DEVICE:SILICON,30V,150MA	07910	1N4152
DS1	150-0035-00			LAMP,GLOW:90V,0.3MA	08806	A1D-T

Ckt No.	Tektronix Part No.	Serial/Model No. Eff	Dscont	Name & Description	Mfr Code	Mfr Part Number
DS2	150-0035-00			LAMP,GLOW:90V,0.3MA	08806	A1D-T
DS3	150-0035-00			LAMP,GLOW:90V,0.3MA	08806	A1D-T
DS4	150-0035-00			LAMP,GLOW:90V,0.3MA	08806	A1D-T
DS18	150-0035-00			LAMP,GLOW:90V,0.3MA	08806	A1D-T
DS27	150-0035-00			LAMP,GLOW:90V,0.3MA	08806	A1D-T
DS28	150-0035-00			LAMP,GLOW:90V,0.3MA	08806	A1D-T
DS31	150-0035-00			LAMP,GLOW:90V,0.3MA	08806	A1D-T
DS103	150-0035-00			LAMP,GLOW:90V,0.3MA	08806	A1D-T
DS104	150-0035-00			LAMP,GLOW:90V,0.3MA	08806	A1D-T
DS108	150-0035-00			LAMP,GLOW:90V,0.3MA	08806	A1D-T
L27	108-0213-00			COIL,RF:2.5MH	76493	8862-2.5
L155	108-0146-00			COIL,RF:5UH	80009	108-0146-00
L432	108-0234-00			COIL,RF:130UH	80009	108-0234-00
Q29	151-0311-01			TRANSISTOR:SILICON,NPN	04713	MJE340
Q31	151-0219-00			TRANSISTOR:SILICON,PNP	80009	151-0219-00
Q41	151-0150-00			TRANSISTOR:SILICON,NPN	80009	151-0150-00
Q47	151-0150-00			TRANSISTOR:SILICON,NPN	80009	151-0150-00
Q84	151-0134-00			TRANSISTOR:SILICON,PNP	80009	151-0134-00
Q95	151-0134-00			TRANSISTOR:SILICON,PNP	80009	151-0134-00
Q122	151-0279-00			TRANSISTOR:SILICON,NPN	80009	151-0279-00
Q123	151-0124-00			TRANSISTOR:SILICON,NPN,SEL FROM 2N3501	80009	151-0124-00
Q143	151-0311-01			TRANSISTOR:SILICON,NPN	04713	MJE340
Q162	151-0219-00			TRANSISTOR:SILICON,PNP	80009	151-0219-00
Q165	151-0311-01			TRANSISTOR:SILICON,NPN	04713	MJE340
Q186	151-0136-00			TRANSISTOR:SILICON,NPN	02735	35495
Q193	151-0136-00			TRANSISTOR:SILICON,NPN	02735	35495
Q231	151-0270-00			TRANSISTOR:SILICON,PNP	80009	151-0270-00
Q244	151-0311-01			TRANSISTOR:SILICON,NPN	04713	MJE340
Q247	151-0219-00			TRANSISTOR:SILICON,PNP	80009	151-0219-00
Q251	151-0219-00			TRANSISTOR:SILICON,PNP	80009	151-0219-00
Q328	151-1005-00			TRANSISTOR:SILICON,JFE,N-CHANNEL	80009	151-1005-00
Q329	151-0302-00			TRANSISTOR:SILICON,NPN	04713	2N2222A
Q338	151-0223-00			TRANSISTOR:SILICON,NPN	80009	151-0223-00
Q354	151-0190-00			TRANSISTOR:SILICON,NPN	80009	151-0190-00
Q355	151-0190-00			TRANSISTOR:SILICON,NPN	80009	151-0190-00
Q361	151-0219-00			TRANSISTOR:SILICON,PNP	80009	151-0219-00
Q362	151-0219-00			TRANSISTOR:SILICON,PNP	80009	151-0219-00
Q364	151-0311-01			TRANSISTOR:SILICON,NPN	04713	MJE340
Q366	151-0311-01			TRANSISTOR:SILICON,NPN	04713	MJE340
Q429	151-0190-00			TRANSISTOR:SILICON,NPN	80009	151-0190-00
Q432	151-0256-00			TRANSISTOR:SILICON,NPN	80009	151-0256-00
Q433	151-0334-00			TRANSISTOR:SILICON,NPN	80009	151-0334-00
Q459[1]	151-0219-00			TRANSISTOR:SILICON,PNP	80009	151-0219-00
Q473	151-0190-00			TRANSISTOR:SILICON,NPN	80009	151-0190-00
Q481	151-0353-00			TRANSISTOR:SILICON,NPN,DUAL MONOLITH	32293	ITS1251
Q482	151-0353-00			TRANSISTOR:SILICON,NPN,DUAL MONOLITH	32293	ITS1251
Q539	151-0347-00			TRANSISTOR:SILICON,NPN	80009	151-0347-00
Q551	151-0188-00			TRANSISTOR:SILICON,PNP	01295	2N3906
Q552	151-0188-00			TRANSISTOR:SILICON,PNP	01295	2N3906
Q674	151-0190-00			TRANSISTOR:SILICON,NPN	80009	151-0190-00
R5	315-0102-03			RES.,FXD,CMPSN:1K OHM,5%,0.25W	01121	CB1025
R6	315-0102-03			RES.,FXD,CMPSN:1K OHM,5%,0.25W	01121	CB1025

[1]On -01 boards and up only.

Ckt No.	Tektronix Part No.	Serial/Model No. Eff	Dscont	Name & Description	Mfr Code	Mfr Part Number
R13	311-1312-00			RES.,VAR,NONWIR:5M OHM,20%,1W	01121	10M586
R18	305-0125-00			RES.,FXD,CMPSN:1.2M OHM,5%,2W	01121	HB1255
R19	315-0222-00			RES.,FXD,CMPSN:2.2K OHM,5%,0.25W	01121	CB2225
R21	315-0202-00			RES.,FXD,CMPSN:2K OHM,5%,0.25W	01121	CB2025
R25	315-0100-02			RES.,FXD,CMPSN:10 OHM,5%,0.25W	01121	CB1005
R26	315-0103-03			RES.,FXD,CMPSN:10K OHM,5%,0.25W	01121	CB1035
R27	315-0102-00			RES.,FXD,CMPSN:1K OHM,5%,0.25W	01121	CB1025
R28	322-0452-00			RES.,FXD,FILM:499K OHM,1%,0.25W	91637	MFF1421G49902F
R29	315-0682-00			RES.,FXD,CMPSN:6.8K OHM,5%,0.25W	01121	CB6825
R30	308-0108-00			RES.,FXD,WW:15K OHM,5%,5W	91637	RS5-B15001J
R31	315-0473-00			RES.,FXD,CMPSN:47K OHM,5%,0.25W	01121	CB4735
R32	315-0471-00			RES.,FXD,CMPSN:470 OHM,5%,0.25W	01121	CB4715
R33	321-0346-00			RES.,FXD,FILM:39.2K OHM,1%,0.125W	91637	MFF1816G39201F
R34	321-0323-00			RES.,FXD,FILM:22.6K OHM,1%,0.125W	91637	MFF1816G22601F
R35	321-0222-00			RES.,FXD,FILM:2K OHM,1%,0.125W	91637	MFF1816G20000F
R36	311-1561-00			RES.,VAR,NONWIR:2.5K OHM,20%,0.50W	73138	91A R2500
R37	305-0154-00			RES.,FXD,CMPSN:150K OHM,5%,2W	01121	HB1545
R38	315-0470-03			RES.,FXD,CMPSN:47 OHM,5%,0.25W	01121	CB4705
R39[1]	315-0101-03			RES.,FXD,CMPSN:100 OHM,5%,0.25W	01121	CB1015
R39	315-0470-03			RES.,FXD,CMPSN:47 OHM,5%,0.25W	01121	CB4705
R40	315-0184-00	XB051379		RES.,FXD,CMPSN:180K OHM,5%,0.25W	01121	CB1845
R41	305-0433-00			RES.,FXD,CMPSN:43K OHM,5%,2W	01121	HB4335
R43	303-0134-00			RES.,FXD,CMPSN:130K OHM,5%,1W	01121	GB1345
R44	303-0134-00			RES.,FXD,CMPSN:130K OHM,5%,1W	01121	GB1345
R48	303-0224-00			RES.,FXD,CMPSN:220K OHM,5%,1W	01121	GB2245
R59	315-0470-03			RES.,FXD,CMPSN:47 OHM,5%,0.25W	01121	CB4705
R61	315-0470-03			RES.,FXD,CMPSN:47 OHM,5%,0.25W	01121	CB4705
R64	305-0683-00			RES.,FXD,CMPSN:68K OHM,5%,2W	01121	HB6835
R66	315-0101-03			RES.,FXD,CMPSN:100 OHM,5%,0.25W	01121	CB1015
R67	315-0470-03			RES.,FXD,CMPSN:47 OHM,5%,0.25W	01121	CB4705
R71	303-0391-00			RES.,FXD,CMPSN:390 OHM,5%,1W	01121	GB3915
R74	307-0344-00			RES.,FXD,FILM:3 SECT,1.5 OHM EA SECT	80009	307-0344-00
R75	303-0331-00			RES.,FXD,CMPSN:330 OHM,5%,1W	01121	GB3315
R86	315-0101-03			RES.,FXD,CMPSN:100 OHM,5%,0.25W	01121	CB1015
R97	315-0101-03			RES.,FXD,CMPSN:100 OHM,5%,0.25W	01121	CB1015
R104	301-0395-00			RES.,FXD,CMPSN:3.9M OHM,5%,0.50W	01121	EB3955
R106	301-0104-00			RES.,FXD,CMPSN:100K OHM,5%,0.5W	01121	EB1045
R108	301-0103-00			RES.,FXD,CMPSN:10K OHM,5%,0.50W	01121	EB1035
R109	315-0102-03			RES.,FXD,CMPSN:1K OHM,5%,0.25W	01121	CB1025
R112	307-0316-00			RES.,FXD,FILM:15M OHM	80009	307-0316-00
R121	315-0101-03			RES.,FXD,CMPSN:100 OHM,5%,0.25W	01121	CB1015
R122	301-0333-00			RES.,FXD,CMPSN:33K OHM,5%,0.50W	01121	EB3335
R123	315-0101-03			RES.,FXD,CMPSN:100 OHM,5%,0.25W	01121	CB1015
R126	315-0102-00			RES.,FXD,CMPSN:1K OHM,5%,0.25W	01121	CB1025
R127	315-0333-00			RES.,FXD,CMPSN:33K OHM,5%,0.25W	01121	CB3335
R128	322-0336-00			RES.,FXD,FILM:30.9K OHM,1%,0.25W	75042	CEBT0-3092F
R129	311-1556-00			RES.,VAR,NONWIR:50K OHM,20%,0.50W	73138	91A R50K
R131	321-0193-00			RES.,FXD,FILM:1K OHM,1%,0.125W	91637	MFF1816G10000F
R132	323-0362-00			RES.,FXD,FILM:57.6K OHM,1%,0.50W	75042	CECT0-5762F
R133	305-0223-00			RES.,FXD,CMPSN:22K OHM,5%,2W	01121	HB2235
R135	315-0101-03			RES.,FXD,CMPSN:100 OHM,5%,0.25W	01121	CB1015
R140	315-0101-03			RES.,FXD,CMPSN:100 OHM,5%,0.25W	01121	CB1015
R146	315-0101-03			RES.,FXD,CMPSN:100 OHM,5%,0.25W	01121	CB1015

[1]On -01 and -02 boards.

Ckt No.	Tektronix Part No.	Serial/Model No. Eff	Dscont	Name & Description	Mfr Code	Mfr Part Number
R148	322-0452-00			RES.,FXD,FILM:499K OHM,1%,0.25W	91637	MFF1421G49902F
R149	315-0101-03			RES.,FXD,CMPSN:100 OHM,5%,0.25W	01121	CB1015
R152	315-0102-00			RES.,FXD,CMPSN:1K OHM,5%,0.25W	01121	CB1025
R153	315-0100-02			RES.,FXD,CMPSN:10 OHM,5%,0.25W	01121	CB1005
R154	315-0102-00			RES.,FXD,CMPSN:1K OHM,5%,0.25W	01121	CB1025
R159	323-0398-00			RES.,FXD,FILM:137K OHM,1%,0.50W	91637	MFF1226G13702F
R167	305-0124-00			RES.,FXD,CMPSN:120K OHM,5%,2W	01121	HB1245
R168	315-0101-03			RES.,FXD,CMPSN:100 OHM,5%,0.25W	01121	CB1015
R169	305-0154-00			RES.,FXD,CMPSN:150K OHM,5%,2W	01121	HB1545
R176	321-0214-00			RES.,FXD,FILM:1.65K OHM,1%,0.125W	91637	MFF1816G16500F
R178	321-0214-00			RES.,FXD,FILM:1.65K OHM,1%,0.125W	91637	MFF1816G16500F
R189	315-0100-02			RES.,FXD,CMPSN:10 OHM,5%,0.25W	01121	CB1005
R190	315-0100-02			RES.,FXD,CMPSN:10 OHM,5%,0.25W	01121	CB1005
R191	315-0511-00			RES.,FXD,CMPSN:510 OHM,5%,0.25W	01121	CB5115
R192	315-0511-00			RES.,FXD,CMPSN:510 OHM,5%,0.25W	01121	CB5115
R196	301-0472-00			RES.,FXD,CMPSN:4.7K OHM,5%,0.50W	01121	EB4725
R198	321-0253-00			RES.,FXD,FILM:4.22K OHM,1%,0.125W	91637	MFF1816G42200F
R199	315-0222-00			RES.,FXD,CMPSN:2.2K OHM,5%,0.25W	01121	CB2225
R208	301-0101-00			RES.,FXD,CMPSN:100 OHM,5%,0.50W	01121	EB1015
R209	301-0101-00			RES.,FXD,CMPSN:100 OHM,5%,0.50W	01121	EB1015
R212	307-0314-00			RES.,FXD,FILM:VOLTAGE DIVIDE	80009	307-0314-00
R221	315-0100-02			RES.,FXD,CMPSN:10 OHM,5%,0.25W	01121	CB1005
R223	321-0452-00			RES.,FXD,FILM:499K OHM,1%,0.125W	91637	MFF1816G49902F
R224	311-1556-00			RES.,VAR,NONWIR:50K OHM,20%,0.50W	73138	91A R50K
R227	315-0681-00			RES.,FXD,CMPSN:680 OHM,5%,0.25W	01121	CB6815
R228	315-0102-00			RES.,FXD,CMPSN:1K OHM,5%,0.25W	01121	CB1025
R229	315-0100-02			RES.,FXD,CMPSN:10 OHM,5%,0.25W	01121	CB1005
R235	322-0338-00			RES.,FXD,FILM:32.4K OHM,1%,0.25W	75042	CEBT0-3242F
R236	321-0289-00			RES.,FXD,FILM:10K OHM,1%,0.125W	91637	MFF1816G10001F
R237	306-0272-00			RES.,FXD,CMPSN:2.7K OHM,10%,2W	01121	HB2721
R242	301-0103-00			RES.,FXD,CMPSN:10K OHM,5%,0.50W	01121	EB1035
R244	315-0682-00			RES.,FXD,CMPSN:6.8K OHM,5%,0.25W	01121	CB6825
R246	315-0101-03			RES.,FXD,CMPSN:100 OHM,5%,0.25W	01121	CB1015
R248	311-1228-00			RES.,VAR,NONWIR:10K OHM,20%,0.50W	32997	3386F-T04-103
R249	315-0101-03			RES.,FXD,CMPSN:100 OHM,5%,0.25W	01121	CB1015
R252	311-1559-00			RES.,VAR,NONWIR:10K OHM,20%,0.50W	73138	91A-10001M
R253	315-0272-00			RES.,FXD,CMPSN:2.7K OHM,5%,0.25W	01121	CB2725
R254	315-0471-00			RES.,FXD,CMPSN:470 OHM,5%,0.25W	01121	CB4715
R255	315-0103-00			RES.,FXD,CMPSN:10K OHM,5%,0.25W	01121	CB1035
R257	315-0103-00			RES.,FXD,CMPSN:10K OHM,5%,0.25W	01121	CB1035
R260	321-0260-00			RES.,FXD,FILM:4.99K OHM,1%,0.125W	91637	MFF1816G49900F
R261	321-0294-00			RES.,FXD,FILM:11.3K OHM,1%,0.125W	91637	MFF1816G11301F
R262	321-0353-00			RES.,FXD,FILM:46.4K OHM,1%,0.125W	91637	MFF1816G46401F
R263	315-0101-03			RES.,FXD,CMPSN:100 OHM,5%,0.25W	01121	CB1015
R264	315-0682-00			RES.,FXD,CMPSN:6.8K OHM,5%,0.25W	01121	CB6825
R267	315-0101-03			RES.,FXD,CMPSN:100 OHM,5%,0.25W	01121	CB1015
R270	311-1731-00			RES.,VAR,NONWIR:20 OHM,0.5W	73138	91A-20R00M
R271	311-1560-00			RES.,VAR,NONWIR:5K OHM,5%,0.50W	73138	91A-50000M
R272	311-1731-00			RES.,VAR,NONWIR:20 OHM,0.5W	73138	91A-20R00M
R273	311-1560-00			RES.,VAR,NONWIR:5K OHM,5%,0.50W	73138	91A-50000M
R280	321-0387-00			RES.,FXD,FILM:105K OHM,1%,0.125W	91637	MFF1816G10502F
R281	321-0328-00			RES.,FXD,FILM:25.5K OHM,1%,0.125W	91637	MFF1816G25501F
R282	321-0318-00			RES.,FXD,FILM:20K OHM,1%,0.125W	91637	MFF1816G20001F

Ckt No.	Tektronix Part No.	Serial/Model No. Eff	Dscont	Name & Description	Mfr Code	Mfr Part Number
R284	321-0214-00			RES.,FXD,FILM:1.65K OHM,1%,0.125W	91637	MFF1816G16500F
R286	321-0318-00			RES.,FXD,FILM:20K OHM,1%,0.125W	91637	MFF1816G20001F
R287	321-0318-00			RES.,FXD,FILM:20K OHM,1%,0.125W	91637	MFF1816G20001F
R289	321-0387-00			RES.,FXD,FILM:105K OHM,1%,0.125W	91637	MFF1816G10502F
R290	321-0328-00			RES.,FXD,FILM:25.5K OHM,1%,0.125W	91637	MFF1816G25501F
R291	321-0318-00			RES.,FXD,FILM:20K OHM,1%,0.125W	91637	MFF1816G20001F
R292	321-0214-00			RES.,FXD,FILM:1.65K OHM,1%,0.125W	91637	MFF1816G16500F
R293	321-0317-00			RES.,FXD,FILM:19.6K OHM,1%,0.125W	91637	MFF1816G19601F
R294	321-0318-00			RES.,FXD,FILM:20K OHM,1%,0.125W	91637	MFF1816G20001F
R295	321-0306-00			RES.,FXD,FILM:15K OHM,1%,0.125W	91637	MFF1816G15001F
R297	321-0253-00			RES.,FXD,FILM:4.22K OHM,1%,0.125W	91637	MFF1816G42200F
R298	321-0253-00			RES.,FXD,FILM:4.22K OHM,1%,0.125W	91637	MFF1816G42200F
R299	321-0253-00			RES.,FXD,FILM:4.22K OHM,1%,0.125W	91637	MFF1816G42200F
R321	315-0224-00			RES.,FXD,CMPSN:220K OHM,5%,0.25W	01121	CB2245
R322	315-0824-00			RES.,FXD,CMPSN:820K OHM,5%,0.25W	01121	CB8245
R323	315-0824-00			RES.,FXD,CMPSN:820K OHM,5%,0.25W	01121	CB8245
R324	315-0104-00			RES.,FXD,CMPSN:100K OHM,5%,0.25W	01121	CB1045
R326	315-0822-00			RES.,FXD,CMPSN:8.2K OHM,5%,0.25W	01121	CB8225
R329	315-0222-00			RES.,FXD,CMPSN:2.2K OHM,5%,0.25W	01121	CB2225
R330	315-0221-00			RES.,FXD,CMPSN:220 OHM,5%,0.25W	01121	CB2215
R331	315-0152-00			RES.,FXD,CMPSN:1.5K OHM,5%,0.25W	01121	CB1525
R332	315-0221-00			RES.,FXD,CMPSN:220 OHM,5%,0.25W	01121	CB2215
R333	315-0471-00			RES.,FXD,CMPSN:470 OHM,5%,0.25W	01121	CB4715
R334	315-0301-00			RES.,FXD,CMPSN:300 OHM,5%,0.25W	01121	CB3015
R335	315-0100-02			RES.,FXD,CMPSN:10 OHM,5%,0.25W	01121	CB1005
R336	315-0102-00			RES.,FXD,CMPSN:1K OHM,5%,0.25W	01121	CB1025
R339	315-0470-03			RES.,FXD,CMPSN:47 OHM,5%,0.25W	01121	CB4705
R341	323-0396-00			RES.,FXD,FILM:130K OHM,1%,0.50W	75042	CECT0-1303F
R342	321-0269-00			RES.,FXD,FILM:6.19K OHM,1%,0.125W	91637	MFF1816G61900F
R343	315-0102-00			RES.,FXD,CMPSN:1K OHM,5%,0.25W	01121	CB1025
R344	315-0472-00			RES.,FXD,CMPSN:4.7K OHM,5%,0.25W	01121	CB4725
R345	315-0222-00			RES.,FXD,CMPSN:2.2K OHM,5%,0.25W	01121	CB2225
R346	321-0316-00			RES.,FXD,FILM:19.1K OHM,1%,0.125W	91637	MFF1816G19101F
R347	321-0309-00			RES.,FXD,FILM:16.2K OHM,1%,0.125W	91637	MFF1816G16201F
R348	321-0289-00			RES.,FXD,FILM:10K OHM,1%,0.125W	91637	MFF1816G10001F
R351	315-0101-03			RES.,FXD,CMPSN:100 OHM,5%,0.25W	01121	CB1015
R352	321-0385-00			RES.,FXD,FILM:100K OHM,1%,0.125W	91637	MFF1816G10002F
R356	315-0471-00			RES.,FXD,CMPSN:470 OHM,5%,0.25W	01121	CB4715
R357	315-0471-00			RES.,FXD,CMPSN:470 OHM,5%,0.25W	01121	CB4715
R358[1]	315-0103-03			RES.,FXD,CMPSN:10K OHM,5%,0.25W	01121	CB1035
R359	311-1228-00			RES.,VAR,NONWIR:10K OHM,20%,0.50W	32997	3386F-T04-103
R360	321-0260-00			RES.,FXD,FILM:4.99K OHM,1%,0.125W	91637	MFF1816G49900F
R361	321-0260-00			RES.,FXD,FILM:4.99K OHM,1%,0.125W	91637	MFF1816G49900F
R369	315-0105-00			RES.,FXD,CMPSN:1M OHM,5%,0.25W	01121	CB1055
R374	321-0289-00			RES.,FXD,FILM:10K OHM,1%,0.125W	91637	MFF1816G10001F
R375	321-0193-00			RES.,FXD,FILM:1K OHM,1%,0.125W	91637	MFF1816G10000F
R376	321-0301-00			RES.,FXD,FILM:13.3K OHM,1%,0.125W	91637	MFF1816G13301F
R377	321-0301-00			RES.,FXD,FILM:13.3K OHM,1%,0.125W	91637	MFF1816G13301F
R382	321-0280-00			RES.,FXD,FILM:8.06K OHM,1%,0.125W	91637	MFF1816G80600F
R384	321-0306-00			RES.,FXD,FILM:15K OHM,1%,0.125W	91637	MFF1816G15001F
R390	321-0309-00			RES.,FXD,FILM:16.2K OHM,1%,0.125W	91637	MFF1816G16201F
R391	321-0309-00			RES.,FXD,FILM:16.2K OHM,1%,0.125W	91637	MFF1816G16201F
R392	311-1567-00			RES.,VAR,NONWIR:100 OHM,20%,0.50W	73138	91A-100R0M

[1]On -01 boards and up.

Ckt No.	Tektronix Part No.	Serial/Model No. Eff	Dscont	Name & Description	Mfr Code	Mfr Part Number
R393	311-1567-00			RES.,VAR,NONWIR:100 OHM,20%,0.50W	73138	91A-100ROM
R398	321-0306-00			RES.,FXD,FILM:15K OHM,1%,0.125W	91637	MFF1816G15001F
R427	315-0103-00			RES.,FXD,CMPSN:10K OHM,5%,0.25W	01121	CB1035
R428	315-0122-00			RES.,FXD,CMPSN:1.2K OHM,5%,0.25W	01121	CB1225
R429	315-0272-00			RES.,FXD,CMPSN:2.7K OHM,5%,0.25W	01121	CB2725
R430	315-0101-03			RES.,FXD,CMPSN:100 OHM,5%,0.25W	01121	CB1015
R432	315-0272-00			RES.,FXD,CMPSN:2.7K OHM,5%,0.25W	01121	CB2725
R433	308-0244-00			RES.,FXD,WW:0.3 OHM,10%,2W	91637	RS2B162ER3000K
R434	308-0244-00			RES.,FXD,WW:0.3 OHM,10%,2W	91637	RS2B162ER3000K
R435	307-0103-00			RES.,FXD,CMPSN:2.7 OHM,5%,0.25W	01121	CB27G5
R436	315-0472-00			RES.,FXD,CMPSN:4.7K OHM,5%,0.25W	01121	CB4725
R438	315-0100-02			RES.,FXD,CMPSN:10 OHM,5%,0.25W	01121	CB1005
R439	315-0100-02			RES.,FXD,CMPSN:10 OHM,5%,0.25W	01121	CB1005
R443	321-0280-00			RES.,FXD,FILM:8.06K OHM,1%,0.125W	91637	MFF1816G80600F
R444	321-0274-00			RES.,FXD,FILM:6.98K OHM,1%,0.125W	91637	MFF1816G69800F
R446	315-0335-00			RES.,FXD,CMPSN:3.3M OHM,5%,0.25W	01121	CB3355
R447	315-0102-00			RES.,FXD,CMPSN:1K OHM,5%,0.25W	01121	CB1025
R448	315-0152-00			RES.,FXD,CMPSN:1.5K OHM,5%,0.25W	01121	CB1525
R449	315-0154-00			RES.,FXD,CMPSN:150K OHM,5%,0.25W	01121	CB1545
R450	315-0103-00			RES.,FXD,CMPSN:10K OHM,5%,0.25W	01121	CB1035
R451	315-0473-00			RES.,FXD,CMPSN:47K OHM,5%,0.25W	01121	CB4735
R452	315-0103-00			RES.,FXD,CMPSN:10K OHM,5%,0.25W	01121	CB1035
R453	315-0472-00			RES.,FXD,CMPSN:4.7K OHM,5%,0.25W	01121	CB4725
R454	315-0472-00			RES.,FXD,CMPSN:4.7K OHM,5%,0.25W	01121	CB4725
R455	315-0102-00			RES.,FXD,CMPSN:1K OHM,5%,0.25W	01121	CB1025
R456[1]	315-0102-00			RES.,FXD,CMPSN:1K OHM,5%,0.25W	01121	CB1025
R457[1]	315-0102-03			RES.,FXD,CMPSN:1K OHM,5%,0.25W	01121	CB1025
R458[1]	315-0102-03			RES.,FXD,CMPSN:1K OHM,5%,0.25W	01121	CB1025
R459	321-0315-00			RES.,FXD,FILM:18.7K OHM,1%,0.125W	91637	MFF1816G18701F
R460	315-0102-00			RES.,FXD,CMPSN:1K OHM,5%,0.25W	01121	CB1025
R461	315-0182-00			RES.,FXD,CMPSN:1.8K OHM,5%,0.25W	01121	CB1825
R462	315-0103-00			RES.,FXD,CMPSN:10K OHM,5%,0.25W	01121	CB1035
R463	315-0103-00			RES.,FXD,CMPSN:10K OHM,5%,0.25W	01121	CB1035
R464	315-0182-00			RES.,FXD,CMPSN:1.8K OHM,5%,0.25W	01121	CB1825
R465	315-0102-00			RES.,FXD,CMPSN:1K OHM,5%,0.25W	01121	CB1025
R466	315-0102-00			RES.,FXD,CMPSN:1K OHM,5%,0.25W	01121	CB1025
R467	315-0103-00			RES.,FXD,CMPSN:10K OHM,5%,0.25W	01121	CB1035
R468	321-0339-00			RES.,FXD,FILM:33.2K OHM,1%,0.125W	91637	MFF1816G33201F
R472	315-0102-00			RES.,FXD,CMPSN:1K OHM,5%,0.25W	01121	CB1025
R473	315-0103-00			RES.,FXD,CMPSN:10K OHM,5%,0.25W	01121	CB1035
R477	321-0253-00			RES.,FXD,FILM:4.22K OHM,1%,0.125W	91637	MFF1816G42200F
R478	321-0253-00			RES.,FXD,FILM:4.22K OHM,1%,0.125W	91637	MFF1816G42200F
R482	315-0470-03			RES.,FXD,CMPSN:47 OHM,5%,0.25W	01121	CB4705
R483	321-0289-00			RES.,FXD,FILM:10K OHM,1%,0.125W	91637	MFF1816G10001F
R485	321-0309-00			RES.,FXD,FILM:16.2K OHM,1%,0.125W	91637	MFF1816G16201F
R491	315-0470-03			RES.,FXD,CMPSN:47 OHM,5%,0.25W	01121	CB4705
R492	321-0301-00			RES.,FXD,FILM:13.3K OHM,1%,0.125W	91637	MFF1816G13301F
R493	321-0318-00			RES.,FXD,FILM:20K OHM,1%,0.125W	91637	MFF1816G20001F
R494	321-0318-00			RES.,FXD,FILM:20K OHM,1%,0.125W	91637	MFF1816G20001F
R495	321-0321-00			RES.,FXD,FILM:21.5K OHM,1%,0.125W	91637	MFF1816G21501F
R498	321-0402-00			RES.,FXD,FILM:150K OHM,1%,0.125W	91637	MFF1816G15002F
R544	307-0103-00			RES.,FXD,CMPSN:2.7 OHM,5%,0.25W	01121	CB27G5
R545	307-0103-00			RES.,FXD,CMPSN:2.7 OHM,5%,0.25W	01121	CB27G5

[1]On -01 boards and up.

Ckt No.	Tektronix Part No.	Serial/Model No. Eff	Dscont	Name & Description	Mfr Code	Mfr Part Number
R546	315-0102-00			RES.,FXD,CMPSN:1K OHM,5%,0.25W	01121	CB1025
R547	315-0472-00			RES.,FXD,CMPSN:4.7K OHM,5%,0.25W	01121	CB4725
R548[1]	315-0273-00			RES.,FXD,CMPSN:27K OHM,5%,0.25W	01121	CB2735
R551[1]	315-0103-00			RES.,FXD,CMPSN:10K OHM,5%,0.25W	01121	CB1035
R572	321-0289-00			RES.,FXD,FILM:10K OHM,1%,0.125W	91637	MFF1816G10001F
R573	321-0288-00			RES.,FXD,FILM:9.76K OHM,1%,0.125W	91637	MFF1816G97600F
R574	321-0289-00			RES.,FXD,FILM:10K OHM,1%,0.125W	91637	MFF1816G10001F
R576	321-0289-00			RES.,FXD,FILM:10K OHM,1%,0.125W	91637	MFF1816G10001F
R578	321-0346-00			RES.,FXD,FILM:39.2K OHM,1%,0.125W	91637	MFF1816G39201F
R581	321-0289-00			RES.,FXD,FILM:10K OHM,1%,0.125W	91637	MFF1816G10001F
R582	321-0289-00			RES.,FXD,FILM:10K OHM,1%,0.125W	91637	MFF1816G10001F
R583	321-0348-00			RES.,FXD,FILM:41.2K OHM,1%,0.125W	91637	MFF1816G41201F
R585	321-0339-00			RES.,FXD,FILM:33.2K OHM,1%,0.125W	91637	MFF1816G33201F
R587	321-0289-00			RES.,FXD,FILM:10K OHM,1%,0.125W	91637	MFF1816G10001F
R588	321-0289-00			RES.,FXD,FILM:10K OHM,1%,0.125W	91637	MFF1816G10001F
R591	321-0402-00			RES.,FXD,FILM:150K OHM,1%,0.125W	91637	MFF1816G15002F
R592	321-0318-00			RES.,FXD,FILM:20K OHM,1%,0.125W	91637	MFF1816G20001F
R594	321-0402-00			RES.,FXD,FILM:150K OHM,1%,0.125W	91637	MFF1816G15002F
R595	321-0289-00			RES.,FXD,FILM:10K OHM,1%,0.125W	91637	MFF1816G10001F
R597	321-0402-00			RES.,FXD,FILM:150K OHM,1%,0.125W	91637	MFF1816G15002F
R598	321-0289-00			RES.,FXD,FILM:10K OHM,1%,0.125W	91637	MFF1816G10001F
R599	321-0318-00			RES.,FXD,FILM:20K OHM,1%,0.125W	91637	MFF1816G20001F
R651	315-0102-00			RES.,FXD,CMPSN:1K OHM,5%,0.25W	01121	CB1025
R652	315-0471-00			RES.,FXD,CMPSN:470 OHM,5%,0.25W	01121	CB4715
R654	315-0472-00			RES.,FXD,CMPSN:4.7K OHM,5%,0.25W	01121	CB4725
R655	315-0102-00			RES.,FXD,CMPSN:1K OHM,5%,0.25W	01121	CB1025
R656	315-0472-00			RES.,FXD,CMPSN:4.7K OHM,5%,0.25W	01121	CB4725
R657	315-0272-00			RES.,FXD,CMPSN:2.7K OHM,5%,0.25W	01121	CB2725
R658	315-0272-00			RES.,FXD,CMPSN:2.7K OHM,5%,0.25W	01121	CB2725
R659	321-0247-00			RES.,FXD,FILM:3.65K OHM,1%,0.125W	91637	MFF1816G36500F
R660[2]	315-0102-00			RES.,FXD,CMPSN:1K OHM,5%,0.25W	01121	CB1025
R661	315-0472-00			RES.,FXD,CMPSN:4.7K OHM,5%,0.25W	01121	CB4725
R662	315-0101-03			RES.,FXD,CMPSN:100 OHM,5%,0.25W	01121	CB1015
R663	315-0472-00			RES.,FXD,CMPSN:4.7K OHM,5%,0.25W	01121	CB4725
R670	307-0103-00			RES.,FXD,CMPSN:2.7 OHM,5%,0.25W	01121	CB27G5
R672	307-0103-00			RES.,FXD,CMPSN:2.7 OHM,5%,0.25W	01121	CB27G5
R673	315-0102-00			RES.,FXD,CMPSN:1K OHM,5%,0.25W	01121	CB1025
R678	321-0346-00			RES.,FXD,FILM:39.2K OHM,1%,0.125W	91637	MFF1816G39201F
R679	321-0289-00			RES.,FXD,FILM:10K OHM,1%,0.125W	91637	MFF1816G10001F
R681	321-0289-00			RES.,FXD,FILM:10K OHM,1%,0.125W	91637	MFF1816G10001F
R682	321-0348-00			RES.,FXD,FILM:41.2K OHM,1%,0.125W	91637	MFF1816G41201F
R686	311-1554-00			RES.,VAR,NONWIR:200K OHM,20%,0.50W	73138	91A R200K
R687	311-1555-00			RES.,VAR,NONWIR:100K OHM,20%,0.5W	73138	91A R100K
R688	315-0102-00			RES.,FXD,CMPSN:1K OHM,5%,0.25W	01121	CB1025
R691	311-1554-00			RES.,VAR,NONWIR:200K OHM,20%,0.50W	73138	91A R200K
R693	321-0270-00			RES.,FXD,FILM:6.34K OHM,1%,0.125W	91637	MFF1816G63400F
R694	321-0385-00			RES.,FXD,FILM:100K OHM,1%,0.125W	91637	MFF1816G10002F
R695	311-1555-00			RES.,VAR,NONWIR:100K OHM,20%,0.5W	73138	91A R100K
R696	315-0912-00			RES.,FXD,CMPSN:9.1K OHM,5%,0.25W	01121	CB9125
R697	315-0912-00			RES.,FXD,CMPSN:9.1K OHM,5%,0.25W	01121	CB9125
R698	315-0471-00			RES.,FXD,CMPSN:470 OHM,5%,0.25W	01121	CB4715
R699	315-0471-00			RES.,FXD,CMPSN:470 OHM,5%,0.25W	01121	CB4715
R772	321-0289-00			RES.,FXD,FILM:10K OHM,1%,0.125W	91637	MFF1816G10001F

[1]On -00 and -01 boards only.
[2]On -00 boards only.

Ckt No.	Tektronix Part No.	Serial/Model No. Eff	Dscont	Name & Description	Mfr Code	Mfr Part Number
R773	321-0288-00			RES.,FXD,FILM:9.76K OHM,1%,0.125W	91637	MFF1816G97600F
R774	321-0289-00			RES.,FXD,FILM:10K OHM,1%,0.125W	91637	MFF1816G10001F
R776	321-0289-00			RES.,FXD,FILM:10K OHM,1%,0.125W	91637	MFF1816G10001F
R778	321-0339-00			RES.,FXD,FILM:33.2K OHM,1%,0.125W	91637	MFF1816G33201F
R782	321-0289-00			RES.,FXD,FILM:10K OHM,1%,0.125W	91637	MFF1816G10001F
R783	321-0289-00			RES.,FXD,FILM:10K OHM,1%,0.125W	91637	MFF1816G10001F
R786	321-0270-00			RES.,FXD,FILM:6.34K OHM,1%,0.125W	91637	MFF1816G63400F
R787	321-0385-00			RES.,FXD,FILM:100K OHM,1%,0.125W	91637	MFF1816G10002F
R792	315-0183-00			RES.,FXD,CMPSN:18K OHM,5%,0.25W	01121	CB1835
R793	315-0183-00			RES.,FXD,CMPSN:18K OHM,5%,0.25W	01121	CB1835
R794	315-0471-00			RES.,FXD,CMPSN:470 OHM,5%,0.25W	01121	CB4715
R795	315-0393-00			RES.,FXD,CMPSN:39K OHM,5%,0.25W	01121	CB3935
R796	315-0393-00			RES.,FXD,CMPSN:39K OHM,5%,0.25W	01121	CB3935
R797	321-0134-00			RES.,FXD,FILM:243 OHM,1%,0.125W	91637	MFF1816G243R0F
R798	321-0134-00			RES.,FXD,FILM:243 OHM,1%,0.125W	91637	MFF1816G243R0F
T154	120-1026-00			XFMR,RF:TOROID,2 WINDINGS	80009	120-1026-00
T314	120-1028-00			XFMR,PWR,SDN&SU:HIGH VOLTAGE	80009	120-1028-00
U155	156-0162-00			MICROCIRCUIT,LI:DIFFERENTIAL VIDEO AMPL	80009	156-0162-00
U184	156-0158-00			MICROCIRCUIT,LI:DUAL OPERATIONAL AMPLIFIER	80009	156-0158-00
U255	156-0096-00			MICROCIRCUIT,LI:VOLTAGE COMPARATOR	27014	LM311H
U296	156-0048-00			MICROCIRCUIT,LI:FIVE NPN TRANSISTOR ARRAY	02735	CA3046
U381	156-0158-00			MICROCIRCUIT,LI:DUAL OPERATIONAL AMPLIFIER	80009	156-0158-00
U445	156-0067-00			MICROCIRCUIT,LI:OPERATIONAL AMPLIFIER	80009	156-0067-00
U496	156-0158-00			MICROCIRCUIT,LI:DUAL OPERATIONAL AMPLIFIER	80009	156-0158-00
U552	156-0145-00			MICROCIRCUIT,DI:QUAD 2-INPUT POS NAND BFR	01295	SN7438N
U555	156-0093-00			MICROCIRCUIT,DI:HEX.INVERTER	01295	SN7416N
U557	156-0706-00			MICROCIRCUIT,DI:DUAL MONOSTABLE MV	01295	SN74221N
U561	156-0093-00			MICROCIRCUIT,DI:HEX.INVERTER	01295	SN7416N
U566	156-0706-00			MICROCIRCUIT,DI:DUAL MONOSTABLE MV	01295	SN74221N
U577	156-0158-00			MICROCIRCUIT,LI:DUAL OPERATIONAL AMPLIFIER	80009	156-0158-00
U777	156-0158-00			MICROCIRCUIT,LI:DUAL OPERATIONAL AMPLIFIER	80009	156-0158-00
U791	156-0032-00			MICROCIRCUIT,DI:4-BIT BINARY COUNTER	01295	SN7493AN
VR196	152-0195-00			SEMICOND DEVICE:ZENER,0.4W,5.1V,5%	80009	152-0195-00
VR265	152-0394-00			SEMICOND DEVICE:ZENER,1W,47V,5%	81483	1N3036B
VR266	152-0087-00			SEMICOND DEVICE:ZENER,1W,100V,5%	04713	SZ1627
VR358	152-0278-00			SEMICOND DEVICE:ZENER,0.4W,3V,5%	07910	1N4372A

A4 CKT BOARD ASSY:DISPLAY
(672-0546-05 & UP)

C11	283-0033-00			CAP.,FXD,CER DI:0.001UF,6000V	72982	3906BW200E102P
C12	283-0101-00			CAP.,FXD,CER DI:4700PF,+80-20%,6000V	56289	45C11A
C23	283-0008-00			CAP.,FXD,CER DI:0.1UF,500V	56289	275C8
C25	283-0008-00			CAP.,FXD,CER DI:0.1UF,500V	56289	275C8
C29	281-0523-00			CAP.,FXD,CER DI:100PF,+/-20PF,500V	72982	301-000U2M0101M
C44	283-0068-00			CAP.,FXD,CER DI:0.01UF,+100-0%,500V	56289	19C241
C62	281-0550-00			CAP.,FXD,CER DI:120PF,10%,500V	04222	7001-1373
C64	283-0068-00			CAP.,FXD,CER DI:0.01UF,+100-0%,500V	56289	19C241
C86	283-0092-00			CAP.,FXD,CER DI:0.03UF,+80-20%,200V	72982	845-534E303Z

Ckt No.	Tektronix Part No.	Serial/Model No. Eff	Dscont	Name & Description	Mfr Code	Mfr Part Number
C96	283-0092-00			CAP.,FXD,CER DI:0.03UF,+80-20%,200V	72982	845-534E303Z
C110	283-0101-00			CAP.,FXD,CER DI:4700PF,+80-20%,6000V	56289	45C11A
C113	283-0101-00			CAP.,FXD,CER DI:4700PF,+80-20%,6000V	56289	45C11A
C136	283-0008-00			CAP.,FXD,CER DI:0.1UF,500V	56289	275C8
C147	283-0068-00			CAP.,FXD,CER DI:0.01UF,+100-0%,500V	56289	19C241
C148	281-0523-00			CAP.,FXD,CER DI:100PF,+/-20PF,500V	72982	301-000U2M0101M
C151	283-0177-00			CAP.,FXD,CER DI:1UF,+80-20%,25V	72982	8131N039 E 105Z
C158	283-0008-00			CAP.,FXD,CER DI:0.1UF,500V	56289	275C8
C159	283-0008-00			CAP.,FXD,CER DI:0.1UF,500V	56289	275C8
C175	281-0605-00			CAP.,FXD,CER DI:200PF,10%,500V	04222	7001-1375
C177	281-0605-00			CAP.,FXD,CER DI:200PF,10%,500V	04222	7001-1375
C189	283-0068-00			CAP.,FXD,CER DI:0.01UF,+100-0%,500V	56289	19C241
C190	283-0068-00			CAP.,FXD,CER DI:0.01UF,+100-0%,500V	56289	19C241
C196	290-0525-00			CAP.,FXD,ELCTLT:4.7UF,20%,50V	56289	196D475X0050KA1
C213	283-0291-00			CAP.,FXD,CER DI:25PF,10%,6000V	56289	41C426
C214	283-0162-00			CAP.,FXD,CER DI:0.01UF,+80-30%,5000V	56289	112C403
C215	283-0101-00			CAP.,FXD,CER DI:4700PF,+80-20%,6000V	56289	45C11A
C222	283-0177-00			CAP.,FXD,CER DI:1UF,+80-20%,25V	72982	8131N039 E 105Z
C228	283-0068-00			CAP.,FXD,CER DI:0.01UF,+100-0%,500V	56289	19C241
C232	283-0068-00			CAP.,FXD,CER DI:0.01UF,+100-0%,500V	56289	19C241
C243	283-0000-00			CAP.,FXD,CER DI:0.001UF,+100-0%,500V	72982	831-516E102P
C244	283-0068-00			CAP.,FXD,CER DI:0.01UF,+100-0%,500V	56289	19C241
C255	281-0623-00			CAP.,FXD,CER DI:650PF,5%,500V	04222	7001-1362
C257	281-0623-00			CAP.,FXD,CER DI:650PF,5%,500V	04222	7001-1362
C258	283-0177-00			CAP.,FXD,CER DI:1UF,+80-20%,25V	72982	8131N039 E 105Z
C259	283-0177-00			CAP.,FXD,CER DI:1UF,+80-20%,25V	72982	8131N039 E 105Z
C286	281-0605-00			CAP.,FXD,CER DI:200PF,10%,500V	04222	7001-1375
C291	281-0605-00			CAP.,FXD,CER DI:200PF,10%,500V	04222	7001-1375
C311	283-0021-00			CAP.,FXD,CER DI:0.001UF,20%,5000V	72982	848-556-Y5S-102M
C312	283-0021-00			CAP.,FXD,CER DI:0.001UF,20%,5000V	72982	848-556-Y5S-102M
C325	283-0067-00			CAP.,FXD,CER DI:0.001UF,10%,200V	72982	835-515B102K
C333	281-0525-00			CAP.,FXD,CER DI:470PF,+/-94PF,500V	04222	7001-1364
C334	283-0177-00			CAP.,FXD,CER DI:1UF,+80-20%,25V	72982	8131N039 E 105Z
C342	281-0504-00			CAP.,FXD,CER DI:10PF,+/-1PF,500V	72982	301-055C0G0100F
C343	281-0604-00			CAP.,FXD,CER DI:2.2PF,+/-0.25PF,500V	72982	301-000C0J0229C
C353	290-0301-00			CAP.,FXD,ELCTLT:10UF,10%,20V	56289	150D106X9020B2
C363	283-0000-00			CAP.,FXD,CER DI:0.001UF,+100-0%,500V	72982	831-516E102P
C364	283-0000-00			CAP.,FXD,CER DI:0.001UF,+100-0%,500V	72982	831-516E102P
C370	290-0260-00			CAP.,FXD,ELCTLT:50UF,+75-10%,200V	56289	34D506G200GL4
C427	283-0067-00			CAP.,FXD,CER DI:0.001UF,10%,200V	72982	835-515B102K
C432	283-0177-00			CAP.,FXD,CER DI:1UF,+80-20%,25V	72982	8131N039 E 105Z
C435	290-0316-00			CAP.,FXD,ELCTLT:47UF,20%,35V	56289	150D476X0035S2
C437	283-0111-00			CAP.,FXD,CER DI:0.1UF,20%,50V	72982	8121-N088Z5U104M
C439	283-0111-00			CAP.,FXD,CER DI:0.1UF,20%,50V	72982	8121-N088Z5U104M
C459	290-0534-00			CAP.,FXD,ELCTLT:1UF,20%,35V	56289	196D105X0035HA1
C466	281-0549-00			CAP.,FXD,CER DI:68PF,10%,500V	72982	301-000U2J0680K
C468	290-0297-00			CAP.,FXD,ELCTLT:39UF,10%,10V	56289	150D396X9010B2
C545	283-0081-00			CAP.,FXD,CER DI:0.1UF,+80-20%,25V	56289	36C600
C650	283-0177-00			CAP.,FXD,CER DI:1UF,+80-20%,25V	72982	8131N039 E 105Z
C659	281-0622-00			CAP.,FXD,CER DI:47PF,1%,500V	72982	308-000C0G0470F

Ckt No.	Tektronix Part No.	Serial/Model No. Eff	Dscont	Name & Description	Mfr Code	Mfr Part Number
C664	283-0000-00			CAP.,FXD,CER DI:0.001UF,+100-0%,500V	72982	831-516E102P
C668	290-0517-00			CAP.,FXD,ELCTLT:6.8UF,20%,35V	56289	196D685X0035KA1
C669	290-0517-00			CAP.,FXD,ELCTLT:6.8UF,20%,35V	56289	196D685X0035KA1
C671	290-0536-00			CAP.,FXD,ELCTLT:10UF,20%,25V	90201	TDC106M025FL
C672	290-0536-00			CAP.,FXD,ELCTLT:10UF,20%,25V	90201	TDC106M025FL
CR4	152-0426-00			SEMICOND DEVICE:SILICON,400V,400MA	01295	G2017-1
CR20	152-0426-00			SEMICOND DEVICE:SILICON,400V,400MA	01295	G2017-1
CR21	152-0061-00			SEMICOND DEVICE:SILICON,175V,100MA	80009	152-0061-00
CR22	152-0061-00			SEMICOND DEVICE:SILICON,175V,100MA	80009	152-0061-00
CR23	152-0066-01			SEMICOND DEVICE:SILICON,400V,1A	80009	152-0066-01
CR24	152-0400-00			SEMICOND DEVICE:SILICON,400V,1A	80009	152-0400-00
CR29	152-0141-02			SEMICOND DEVICE:SILICON,30V,150MA	07910	1N4152
CR40	152-0066-01			SEMICOND DEVICE:SILICON,400V,1A	80009	152-0066-01
CR45	152-0141-02			SEMICOND DEVICE:SILICON,30V,150MA	07910	1N4152
CR59	152-0141-02			SEMICOND DEVICE:SILICON,30V,150MA	07910	1N4152
CR67	152-0141-02			SEMICOND DEVICE:SILICON,30V,150MA	07910	1N4152
CR81	152-0141-02			SEMICOND DEVICE:SILICON,30V,150MA	07910	1N4152
CR82	152-0141-02			SEMICOND DEVICE:SILICON,30V,150MA	07910	1N4152
CR91	152-0141-02			SEMICOND DEVICE:SILICON,30V,150MA	07910	1N4152
CR92	152-0141-02			SEMICOND DEVICE:SILICON,30V,150MA	07910	1N4152
CR103	152-0426-00			SEMICOND DEVICE:SILICON,400V,400MA	01295	G2017-1
CR121	152-0061-00			SEMICOND DEVICE:SILICON,175V,100MA	80009	152-0061-00
CR122	152-0141-02			SEMICOND DEVICE:SILICON,30V,150MA	07910	1N4152
CR128	152-0066-01			SEMICOND DEVICE:SILICON,400V,1A	80009	152-0066-01
CR169	152-0040-00			SEMICOND DEVICE:SILICON,600V,1A	80009	152-0040-00
CR203	152-0408-00			SEMICOND DEVICE:SILICON,10KV,5MA	83003	H345
CR204	152-0408-00			SEMICOND DEVICE:SILICON,10KV,5MA	83003	H345
CR264	152-0107-00			SEMICOND DEVICE:SILICON,400V,400MA	80009	152-0107-00
CR311	152-0429-00			SEMICOND DEVICE:SILICON,5000V,10MA	14099	SA3282
CR312	152-0429-00			SEMICOND DEVICE:SILICON,5000V,10MA	14099	SA3282
CR328	152-0141-02			SEMICOND DEVICE:SILICON,30V,150MA	07910	1N4152
CR329	152-0141-02			SEMICOND DEVICE:SILICON,30V,150MA	07910	1N4152
CR350	152-0141-02			SEMICOND DEVICE:SILICON,30V,150MA	07910	1N4152
CR429	152-0412-00			SEMICOND DEVICE:SILICON,50V,3A	80009	152-0412-00
CR432	152-0333-00			SEMICOND DEVICE:SILICON,55V,200MA	80009	152-0333-00
CR450	152-0141-02			SEMICOND DEVICE:SILICON,30V,150MA	07910	1N4152
CR545	152-0141-02			SEMICOND DEVICE:SILICON,30V,150MA	07910	1N4152
DS1	150-0035-00			LAMP,GLOW:90V,0.3MA	08806	A1D-T
DS2	150-0035-00			LAMP,GLOW:90V,0.3MA	08806	A1D-T
DS3	150-0035-00			LAMP,GLOW:90V,0.3MA	08806	A1D-T
DS4	150-0035-00			LAMP,GLOW:90V,0.3MA	08806	A1D-T
DS18	150-0035-00			LAMP,GLOW:90V,0.3MA	08806	A1D-T
DS27	150-0035-00			LAMP,GLOW:90V,0.3MA	08806	A1D-T
DS28	150-0035-00			LAMP,GLOW:90V,0.3MA	08806	A1D-T
DS31	150-0035-00			LAMP,GLOW:90V,0.3MA	08806	A1D-T
DS103	150-0035-00			LAMP,GLOW:90V,0.3MA	08806	A1D-T
DS104	150-0035-00			LAMP,GLOW:90V,0.3MA	08806	A1D-T
DS108	150-0035-00			LAMP,GLOW:90V,0.3MA	08806	A1D-T
L27	108-0213-00			COIL,RF:2.5MH	76493	8862-2.5
L155	108-0146-00			COIL,RF:5UH	80009	108-0146-00
L432	108-0234-00			COIL,RF:130UH	80009	108-0234-00
L545	120-0382-00			XFMR,TOROID:14 TURNS,SINGLE	80009	120-0382-00

Ckt No.	Tektronix Part No.	Serial/Model No. Eff	Dscont	Name & Description	Mfr Code	Mfr Part Number
Q29	151-0311-01			TRANSISTOR:SILICON,NPN	04713	MJE340
Q41	151-0150-00			TRANSISTOR:SILICON,NPN	80009	151-0150-00
Q47	151-0150-00			TRANSISTOR:SILICON,NPN	80009	151-0150-00
Q84	151-0134-00			TRANSISTOR:SILICON,PNP	80009	151-0134-00
Q95	151-0134-00			TRANSISTOR:SILICON,PNP	80009	151-0134-00
Q122	151-0279-00			TRANSISTOR:SILICON,NPN	80009	151-0279-00
Q123	151-0124-00			TRANSISTOR:SILICON,NPN,SEL FROM 2N3501	80009	151-0124-00
Q143	151-0311-01			TRANSISTOR:SILICON,NPN	04713	MJE340
Q162	151-0219-00			TRANSISTOR:SILICON,PNP	80009	151-0219-00
Q165	151-0311-01			TRANSISTOR:SILICON,NPN	04713	MJE340
Q186	151-0316-00			TRANSISTOR:SILICON,NPN	80009	151-0316-00
Q193	151-0136-00			TRANSISTOR:SILICON,NPN	02735	35495
Q231	151-0270-00			TRANSISTOR:SILICON,PNP	80009	151-0270-00
Q244	151-0311-01			TRANSISTOR:SILICON,NPN	04713	MJE340
Q247	151-0219-00			TRANSISTOR:SILICON,PNP	80009	151-0219-00
Q251	151-0219-00			TRANSISTOR:SILICON,PNP	80009	151-0219-00
Q328	151-1005-00			TRANSISTOR:SILICON,JFE,N-CHANNEL	80009	151-1005-00
Q329	151-0302-00			TRANSISTOR:SILICON,NPN	04713	2N2222A
Q338	151-0223-00			TRANSISTOR:SILICON,NPN	80009	151-0223-00
Q354	151-0190-00			TRANSISTOR:SILICON,NPN	80009	151-0190-00
Q355	151-0190-00			TRANSISTOR:SILICON,NPN	80009	151-0190-00
Q361	151-0219-00			TRANSISTOR:SILICON,PNP	80009	151-0219-00
Q362	151-0219-00			TRANSISTOR:SILICON,PNP	80009	151-0219-00
Q364	151-0311-01			TRANSISTOR:SILICON,NPN	04713	MJE340
Q366	151-0311-01			TRANSISTOR:SILICON,NPN	04713	MJE340
Q429	151-0190-00			TRANSISTOR:SILICON,NPN	80009	151-0190-00
Q432	151-0256-00			TRANSISTOR:SILICON,NPN	80009	151-0256-00
Q433	151-0334-00			TRANSISTOR:SILICON,NPN	80009	151-0334-00
Q459	151-0219-00			TRANSISTOR:SILICON,PNP	80009	151-0219-00
Q539	151-0347-00			TRANSISTOR:SILICON,NPN	80009	151-0347-00
Q1038	151-0423-00			TRANSISTOR:SILICON,NPN	01295	TIP50
Q1044	151-0423-00			TRANSISTOR:SILICON,NPN	01295	TIP50
Q1048	151-0423-00			TRANSISTOR:SILICON,NPN	01295	TIP50
Q1059	151-0423-00			TRANSISTOR:SILICON,NPN	01295	TIP50
Q1067	151-0423-00			TRANSISTOR:SILICON,NPN	01295	TIP50
Q1069	151-0349-00			TRANSISTOR:SILICON,NPN,SEL FROM MJE2801	80009	151-0349-00
Q1074	151-0373-00			TRANSISTOR:SILICON,PNP	80009	151-0373-00
Q1084	151-0349-00			TRANSISTOR:SILICON,NPN,SEL FROM MJE2801	80009	151-0349-00
Q1096	151-0373-00			TRANSISTOR:SILICON,PNP	80009	151-0373-00
R5	315-0102-03			RES.,FXD,CMPSN:1K OHM,5%,0.25W	01121	CB1025
R6	315-0102-03			RES.,FXD,CMPSN:1K OHM,5%,0.25W	01121	CB1025
R13	311-1312-00			RES.,VAR,NONWIR:5M OHM,20%,1W	01121	10M586
R18	305-0125-00			RES.,FXD,CMPSN:1.2M OHM,5%,2W	01121	HB1255
R19	315-0222-00			RES.,FXD,CMPSN:2.2K OHM,5%,0.25W	01121	CB2225
R21	315-0202-00			RES.,FXD,CMPSN:2K OHM,5%,0.25W	01121	CB2025
R25	315-0100-02			RES.,FXD,CMPSN:10 OHM,5%,0.25W	01121	CB1005
R26	315-0103-03			RES.,FXD,CMPSN:10K OHM,5%,0.25W	01121	CB1035
R27	322-0452-00			RES.,FXD,FILM:499K OHM,1%,0.25W	91637	MFF1421G49902F
R28	321-0193-00			RES.,FXD,FILM:1K OHM,1%,0.125W	91637	MFF1816G10000F
R29	321-0222-00			RES.,FXD,FILM:2K OHM,1%,0.125W	91637	MFF1816G20000F
R30	308-0108-00			RES.,FXD,WW:15K OHM,5%,5W	91637	RS5-B15001J
R32	321-0349-00			RES.,FXD,FILM:42.2K OHM,1%,0.125W	91637	MFF1816G42201F
R33	321-0289-00			RES.,FXD,FILM:10K OHM,1%,0.125W	91637	MFF1816G10001F

Ckt No.	Tektronix Part No.	Serial/Model No. Eff	Dscont	Name & Description	Mfr Code	Mfr Part Number
R34	321-0366-00			RES.,FXD,FILM:63.4K OHM,1%,0.125W	91637	MFF1816G63401F
R35	321-0260-00			RES.,FXD,FILM:4.99K OHM,1%,0.125W	91637	MFF1816G49900F
R36	311-1560-00			RES.,VAR,NONWIR:5K OHM,5%,0.50W	73138	91A-50000M
R37	305-0154-00			RES.,FXD,CMPSN:150K OHM,5%,2W	01121	HB1545
R38	315-0470-03			RES.,FXD,CMPSN:47 OHM,5%,0.25W	01121	CB4705
R39	315-0470-03			RES.,FXD,CMPSN:47 OHM,5%,0.25W	01121	CB4705
R40	315-0184-00			RES.,FXD,CMPSN:180K OHM,5%,0.25W	01121	CB1845
R41	305-0433-00			RES.,FXD,CMPSN:43K OHM,5%,2W	01121	HB4335
R43	303-0134-00			RES.,FXD,CMPSN:130K OHM,5%,1W	01121	GB1345
R44	303-0134-00			RES.,FXD,CMPSN:130K OHM,5%,1W	01121	GB1345
R48	303-0224-00			RES.,FXD,CMPSN:220K OHM,5%,1W	01121	GB2245
R59	315-0470-03			RES.,FXD,CMPSN:47 OHM,5%,0.25W	01121	CB4705
R61	315-0470-03			RES.,FXD,CMPSN:47 OHM,5%,0.25W	01121	CB4705
R64	305-0683-00			RES.,FXD,CMPSN:68K OHM,5%,2W	01121	HB6835
R66	315-0101-03			RES.,FXD,CMPSN:100 OHM,5%,0.25W	01121	CB1015
R67	315-0470-03			RES.,FXD,CMPSN:47 OHM,5%,0.25W	01121	CB4705
R71	303-0391-00			RES.,FXD,CMPSN:390 OHM,5%,1W	01121	GB3915
R74	307-0344-00			RES.,FXD,FILM:3 SECT,1.5 OHM EA SECT	80009	307-0344-00
R75	303-0331-00			RES.,FXD,CMPSN:330 OHM,5%,1W	01121	GB3315
R86	315-0101-03			RES.,FXD,CMPSN:100 OHM,5%,0.25W	01121	CB1015
R97	315-0101-03			RES.,FXD,CMPSN:100 OHM,5%,0.25W	01121	CB1015
R104	301-0395-00			RES.,FXD,CMPSN:3.9M OHM,5%,0.50W	01121	EB3955
R106	301-0104-00			RES.,FXD,CMPSN:100K OHM,5%,0.5W	01121	EB1045
R108	301-0103-00			RES.,FXD,CMPSN:10K OHM,5%,0.50W	01121	EB1035
R109	315-0102-03			RES.,FXD,CMPSN:1K OHM,5%,0.25W	01121	CB1025
R112	307-0316-00			RES.,FXD,FILM:15M OHM	80009	307-0316-00
R121	315-0101-03			RES.,FXD,CMPSN:100 OHM,5%,0.25W	01121	CB1015
R122	301-0333-00			RES.,FXD,CMPSN:33K OHM,5%,0.50W	01121	EB3335
R123	315-0101-03			RES.,FXD,CMPSN:100 OHM,5%,0.25W	01121	CB1015
R126	315-0102-00			RES.,FXD,CMPSN:1K OHM,5%,0.25W	01121	CB1025
R127	315-0333-00			RES.,FXD,CMPSN:33K OHM,5%,0.25W	01121	CB3335
R128	322-0336-00			RES.,FXD,FILM:30.9K OHM,1%,0.25W	75042	CEBT0-3092F
R129	311-1556-00			RES.,VAR,NONWIR:50K OHM,20%,0.50W	73138	91A R50K
R131	321-0193-00			RES.,FXD,FILM:1K OHM,1%,0.125W	91637	MFF1816G10000F
R132	323-0362-00			RES.,FXD,FILM:57.6K OHM,1%,0.50W	75042	CECT0-5762F
R133	305-0223-00			RES.,FXD,CMPSN:22K OHM,5%,2W	01121	HB2235
R135	315-0101-03			RES.,FXD,CMPSN:100 OHM,5%,0.25W	01121	CB1015
R140	315-0101-03			RES.,FXD,CMPSN:100 OHM,5%,0.25W	01121	CB1015
R146	315-0101-03			RES.,FXD,CMPSN:100 OHM,5%,0.25W	01121	CB1015
R148	322-0452-00			RES.,FXD,FILM:499K OHM,1%,0.25W	91637	MFF1421G49902F
R149	315-0101-03			RES.,FXD,CMPSN:100 OHM,5%,0.25W	01121	CB1015
R152	315-0102-00			RES.,FXD,CMPSN:1K OHM,5%,0.25W	01121	CB1025
R153	315-0100-02			RES.,FXD,CMPSN:10 OHM,5%,0.25W	01121	CB1005
R154	315-0102-00			RES.,FXD,CMPSN:1K OHM,5%,0.25W	01121	CB1025
R159	323-0398-00			RES.,FXD,FILM:137K OHM,1%,0.50W	91637	MFF1226G13702F
R167	305-0124-00			RES.,FXD,CMPSN:120K OHM,5%,2W	01121	HB1245
R168	315-0101-03			RES.,FXD,CMPSN:100 OHM,5%,0.25W	01121	CB1015
R169	305-0154-00			RES.,FXD,CMPSN:150K OHM,5%,2W	01121	HB1545
R176	321-0234-00			RES.,FXD,FILM:2.67K OHM,1%,0.125W	91637	MFF1816G26700F
R178	321-0243-00			RES.,FXD,FILM:3.32K OHM,1%,0.125W	91637	MFF1816G33200F
R189	315-0100-02			RES.,FXD,CMPSN:10 OHM,5%,0.25W	01121	CB1005
R190	315-0100-02			RES.,FXD,CMPSN:10 OHM,5%,0.25W	01121	CB1005
R191	315-0511-00			RES.,FXD,CMPSN:510 OHM,5%,0.25W	01121	CB5115

Ckt No.	Tektronix Part No.	Serial/Model No. Eff	Dscont	Name & Description	Mfr Code	Mfr Part Number
R192	315-0511-00			RES.,FXD,CMPSN:510 OHM,5%,0.25W	01121	CB5115
R196	301-0472-00			RES.,FXD,CMPSN:4.7K OHM,5%,0.50W	01121	EB4725
R208	301-0101-00			RES.,FXD,CMPSN:100 OHM,5%,0.50W	01121	EB1015
R209	301-0101-00			RES.,FXD,CMPSN:100 OHM,5%,0.50W	01121	EB1015
R212	307-0314-00	B082623	B082819	RES.,FXD,FILM:VOLTAGE DIVIDE	80009	307-0314-00
R212	307-0314-01	B082820		RES.,FXD,FILM:VOLTAGE DIVIDE	80009	307-0314-01
R221	315-0100-02			RES.,FXD,CMPSN:10 OHM,5%,0.25W	01121	CB1005
R223	321-0452-00			RES.,FXD,FILM:499K OHM,1%,0.125W	91637	MFF1816G49902F
R224	311-1556-00			RES.,VAR,NONWIR:50K OHM,20%,0.50W	73138	91A R50K
R227	315-0681-00			RES.,FXD,CMPSN:680 OHM,5%,0.25W	01121	CB6815
R228	315-0102-00			RES.,FXD,CMPSN:1K OHM,5%,0.25W	01121	CB1025
R229	315-0100-02			RES.,FXD,CMPSN:10 OHM,5%,0.25W	01121	CB1005
R235	322-0338-00			RES.,FXD,FILM:32.4K OHM,1%,0.25W	75042	CEBT0-3242F
R236	321-0289-00			RES.,FXD,FILM:10K OHM,1%,0.125W	91637	MFF1816G10001F
R237	306-0272-00			RES.,FXD,CMPSN:2.7K OHM,10%,2W	01121	HB2721
R242	301-0272-00			RES.,FXD,CMPSN:2.7K OHM,5%,0.50W	01121	EB2725
R244	315-0682-00			RES.,FXD,CMPSN:6.8K OHM,5%,0.25W	01121	CB6825
R246	315-0101-03			RES.,FXD,CMPSN:100 OHM,5%,0.25W	01121	CB1015
R248	311-1228-00			RES.,VAR,NONWIR:10K OHM,20%,0.50W	32997	3386F-T04-103
R249	315-0101-03			RES.,FXD,CMPSN:100 OHM,5%,0.25W	01121	CB1015
R252	311-1559-00			RES.,VAR,NONWIR:10K OHM,20%,0.50W	73138	91A-10001M
R253	315-0272-00			RES.,FXD,CMPSN:2.7K OHM,5%,0.25W	01121	CB2725
R254	315-0471-00			RES.,FXD,CMPSN:470 OHM,5%,0.25W	01121	CB4715
R255	315-0103-00			RES.,FXD,CMPSN:10K OHM,5%,0.25W	01121	CB1035
R257	315-0103-00			RES.,FXD,CMPSN:10K OHM,5%,0.25W	01121	CB1035
R260	321-0260-00			RES.,FXD,FILM:4.99K OHM,1%,0.125W	91637	MFF1816G49900F
R261	321-0294-00			RES.,FXD,FILM:11.3K OHM,1%,0.125W	91637	MFF1816G11301F
R262	321-0353-00			RES.,FXD,FILM:46.4K OHM,1%,0.125W	91637	MFF1816G46401F
R263	315-0101-03			RES.,FXD,CMPSN:100 OHM,5%,0.25W	01121	CB1015
R264	315-0682-00			RES.,FXD,CMPSN:6.8K OHM,5%,0.25W	01121	CB6825
R267	315-0101-03			RES.,FXD,CMPSN:100 OHM,5%,0.25W	01121	CB1015
R270	311-1731-00			RES.,VAR,NONWIR:20 OHM,0.5W	73138	91A-20R00M
R271	311-1560-00			RES.,VAR,NONWIR:5K OHM,5%,0.50W	73138	91A-50000M
R272	311-1731-00			RES.,VAR,NONWIR:20 OHM,0.5W	73138	91A-20R00M
R273	311-1560-00			RES.,VAR,NONWIR:5K OHM,5%,0.50W	73138	91A-50000M
R280	321-0387-00			RES.,FXD,FILM:105K OHM,1%,0.125W	91637	MFF1816G10502F
R281	321-0328-00			RES.,FXD,FILM:25.5K OHM,1%,0.125W	91637	MFF1816G25501F
R284	321-0234-00			RES.,FXD,FILM:2.67K OHM,1%,0.125W	91637	MFF1816G26700F
R286	321-0328-00			RES.,FXD,FILM:25.5K OHM,1%,0.125W	91637	MFF1816G25501F
R289	321-0387-00			RES.,FXD,FILM:105K OHM,1%,0.125W	91637	MFF1816G10502F
R290	321-0328-00			RES.,FXD,FILM:25.5K OHM,1%,0.125W	91637	MFF1816G25501F
R292	321-0243-00			RES.,FXD,FILM:3.32K OHM,1%,0.125W	91637	MFF1816G33200F
R293	321-0328-00			RES.,FXD,FILM:25.5K OHM,1%,0.125W	91637	MFF1816G25501F
R321	315-0224-00			RES.,FXD,CMPSN:220K OHM,5%,0.25W	01121	CB2245
R322	315-0824-00			RES.,FXD,CMPSN:820K OHM,5%,0.25W	01121	CB8245
R323	315-0824-00			RES.,FXD,CMPSN:820K OHM,5%,0.25W	01121	CB8245
R324	315-0104-00			RES.,FXD,CMPSN:100K OHM,5%,0.25W	01121	CB1045
R326	315-0822-00			RES.,FXD,CMPSN:8.2K OHM,5%,0.25W	01121	CB8225
R329	315-0222-00			RES.,FXD,CMPSN:2.2K OHM,5%,0.25W	01121	CB2225
R330	315-0221-00			RES.,FXD,CMPSN:220 OHM,5%,0.25W	01121	CB2215
R331	315-0152-00			RES.,FXD,CMPSN:1.5K OHM,5%,0.25W	01121	CB1525
R332	315-0221-00			RES.,FXD,CMPSN:220 OHM,5%,0.25W	01121	CB2215
R333	315-0471-00			RES.,FXD,CMPSN:470 OHM,5%,0.25W	01121	CB4715

Ckt No.	Tektronix Part No.	Serial/Model No. Eff	Dscont	Name & Description	Mfr Code	Mfr Part Number
R334	315-0301-00			RES.,FXD,CMPSN:300 OHM,5%,0.25W	01121	CB3015
R335	315-0100-02			RES.,FXD,CMPSN:10 OHM,5%,0.25W	01121	CB1005
R336	315-0102-00			RES.,FXD,CMPSN:1K OHM,5%,0.25W	01121	CB1025
R339	315-0470-03			RES.,FXD,CMPSN:47 OHM,5%,0.25W	01121	CB4705
R341	323-0396-00			RES.,FXD,FILM:130K OHM,1%,0.50W	75042	CECT0-1303F
R342	321-0269-00			RES.,FXD,FILM:6.19K OHM,1%,0.125W	91637	MFF1816G61900F
R343	315-0102-00			RES.,FXD,CMPSN:1K OHM,5%,0.25W	01121	CB1025
R344	315-0472-00			RES.,FXD,CMPSN:4.7K OHM,5%,0.25W	01121	CB4725
R345	315-0222-00			RES.,FXD,CMPSN:2.2K OHM,5%,0.25W	01121	CB2225
R346	321-0316-00			RES.,FXD,FILM:19.1K OHM,1%,0.125W	91637	MFF1816G19101F
R347	321-0309-00			RES.,FXD,FILM:16.2K OHM,1%,0.125W	91637	MFF1816G16201F
R348	321-0289-00			RES.,FXD,FILM:10K OHM,1%,0.125W	91637	MFF1816G10001F
R351	315-0101-03			RES.,FXD,CMPSN:100 OHM,5%,0.25W	01121	CB1015
R352	321-0385-00			RES.,FXD,FILM:100K OHM,1%,0.125W	91637	MFF1816G10002F
R353	315-0201-02			RES.,FXD,CMPSN:200 OHM,5%,0.25W	01121	CB2015
R355	315-0201-02			RES.,FXD,CMPSN:200 OHM,5%,0.25W	01121	CB2015
R356	315-0471-00			RES.,FXD,CMPSN:470 OHM,5%,0.25W	01121	CB4715
R357	315-0471-00			RES.,FXD,CMPSN:470 OHM,5%,0.25W	01121	CB4715
R359	311-1228-00			RES.,VAR,NONWIR:10K OHM,20%,0.50W	32997	3386F-T04-103
R360	321-0260-00			RES.,FXD,FILM:4.99K OHM,1%,0.125W	91637	MFF1816G49900F
R361	321-0260-00			RES.,FXD,FILM:4.99K OHM,1%,0.125W	91637	MFF1816G49900F
R369	315-0105-00			RES.,FXD,CMPSN:1M OHM,5%,0.25W	01121	CB1055
R392	311-1559-00			RES.,VAR,NONWIR:10K OHM,20%,0.50W	73138	91A-10001M
R393	311-1559-00			RES.,VAR,NONWIR:10K OHM,20%,0.50W	73138	91A-10001M
R427	315-0103-00			RES.,FXD,CMPSN:10K OHM,5%,0.25W	01121	CB1035
R428	315-0122-00			RES.,FXD,CMPSN:1.2K OHM,5%,0.25W	01121	CB1225
R429	315-0272-00			RES.,FXD,CMPSN:2.7K OHM,5%,0.25W	01121	CB2725
R430	315-0101-03			RES.,FXD,CMPSN:100 OHM,5%,0.25W	01121	CB1015
R432	315-0272-00			RES.,FXD,CMPSN:2.7K OHM,5%,0.25W	01121	CB2725
R433	308-0244-00			RES.,FXD,WW:0.3 OHM,10%,2W	91637	RS2B162ER3000K
R434	308-0244-00			RES.,FXD,WW:0.3 OHM,10%,2W	91637	RS2B162ER3000K
R435	307-0103-00			RES.,FXD,CMPSN:2.7 OHM,5%,0.25W	01121	CB27G5
R436	315-0472-00			RES.,FXD,CMPSN:4.7K OHM,5%,0.25W	01121	CB4725
R438	315-0100-02			RES.,FXD,CMPSN:10 OHM,5%,0.25W	01121	CB1005
R439	315-0100-02			RES.,FXD,CMPSN:10 OHM,5%,0.25W	01121	CB1005
R443	321-0280-00			RES.,FXD,FILM:8.06K OHM,1%,0.125W	91637	MFF1816G80600F
R444	321-0274-00			RES.,FXD,FILM:6.98K OHM,1%,0.125W	91637	MFF1816G69800F
R446	315-0335-00			RES.,FXD,CMPSN:3.3M OHM,5%,0.25W	01121	CB3355
R447	315-0102-00			RES.,FXD,CMPSN:1K OHM,5%,0.25W	01121	CB1025
R448	315-0152-00			RES.,FXD,CMPSN:1.5K OHM,5%,0.25W	01121	CB1525
R449	315-0154-00			RES.,FXD,CMPSN:150K OHM,5%,0.25W	01121	CB1545
R450	315-0103-00			RES.,FXD,CMPSN:10K OHM,5%,0.25W	01121	CB1035
R451	315-0473-00			RES.,FXD,CMPSN:47K OHM,5%,0.25W	01121	CB4735
R453	315-0472-00			RES.,FXD,CMPSN:4.7K OHM,5%,0.25W	01121	CB4725
R454	315-0472-00			RES.,FXD,CMPSN:4.7K OHM,5%,0.25W	01121	CB4725
R455	315-0102-00			RES.,FXD,CMPSN:1K OHM,5%,0.25W	01121	CB1025
R456	315-0103-00			RES.,FXD,CMPSN:10K OHM,5%,0.25W	01121	CB1035
R457	321-0315-00			RES.,FXD,FILM:18.7K OHM,1%,0.125W	91637	MFF1816G18701F
R459	315-0102-00			RES.,FXD,CMPSN:1K OHM,5%,0.25W	01121	CB1025
R460	315-0102-00			RES.,FXD,CMPSN:1K OHM,5%,0.25W	01121	CB1025
R461	315-0103-00			RES.,FXD,CMPSN:10K OHM,5%,0.25W	01121	CB1035
R462	315-0182-00			RES.,FXD,CMPSN:1.8K OHM,5%,0.25W	01121	CB1825
R463	315-0103-00			RES.,FXD,CMPSN:10K OHM,5%,0.25W	01121	CB1035

Ckt No.	Tektronix Part No.	Serial/Model No. Eff	Dscont	Name & Description	Mfr Code	Mfr Part Number
R464	315-0182-00			RES.,FXD,CMPSN:1.8K OHM,5%,0.25W	01121	CB1825
R465	315-0102-00			RES.,FXD,CMPSN:1K OHM,5%,0.25W	01121	CB1025
R466	315-0102-00			RES.,FXD,CMPSN:1K OHM,5%,0.25W	01121	CB1025
R467	315-0103-00			RES.,FXD,CMPSN:10K OHM,5%,0.25W	01121	CB1035
R468	321-0339-00			RES.,FXD,FILM:33.2K OHM,1%,0.125W	91637	MFF1816G33201F
R471	321-0392-00			RES.,FXD,FILM:118K OHM,1%,0.125W	91637	MFF1816G11802F
R472	321-0306-00			RES.,FXD,FILM:15K OHM,1%,0.125W	91637	MFF1816G15001F
R473	321-0280-00			RES.,FXD,FILM:8.06K OHM,1%,0.125W	91637	MFF1816G80600F
R493	321-0280-00			RES.,FXD,FILM:8.06K OHM,1%,0.125W	91637	MFF1816G80600F
R494	321-0405-00			RES.,FXD,FILM:162K OHM,1%,0.125W	91637	MFF1816G16202F
R495	321-0341-00			RES.,FXD,FILM:34.8K OHM,1%,0.125W	91637	MFF1816G34801F
R544	307-0103-00			RES.,FXD,CMPSN:2.7 OHM,5%,0.25W	01121	CB27G5
R545	307-0103-00			RES.,FXD,CMPSN:2.7 OHM,5%,0.25W	01121	CB27G5
R546	315-0102-00			RES.,FXD,CMPSN:1K OHM,5%,0.25W	01121	CB1025
R548	315-0102-00			RES.,FXD,CMPSN:1K OHM,5%,0.25W	01121	CB1025
R588	321-0314-00			RES.,FXD,FILM:18.2K OHM,1%,0.125W	91637	MFF1816G18201F
R594	321-0236-00			RES.,FXD,FILM:2.8K OHM,1%,0.125W	91637	MFF1816G28000F
R595	321-0314-00			RES.,FXD,FILM:18.2K OHM,1%,0.125W	91637	MFF1816G18201F
R651	315-0102-00			RES.,FXD,CMPSN:1K OHM,5%,0.25W	01121	CB1025
R652	315-0471-00			RES.,FXD,CMPSN:470 OHM,5%,0.25W	01121	CB4715
R654	315-0472-00			RES.,FXD,CMPSN:4.7K OHM,5%,0.25W	01121	CB4725
R655	315-0102-00			RES.,FXD,CMPSN:1K OHM,5%,0.25W	01121	CB1025
R656	315-0472-00			RES.,FXD,CMPSN:4.7K OHM,5%,0.25W	01121	CB4725
R657	315-0272-00			RES.,FXD,CMPSN:2.7K OHM,5%,0.25W	01121	CB2725
R658	315-0272-00			RES.,FXD,CMPSN:2.7K OHM,5%,0.25W	01121	CB2725
R659	315-0102-00			RES.,FXD,CMPSN:1K OHM,5%,0.25W	01121	CB1025
R660	315-0102-00			RES.,FXD,CMPSN:1K OHM,5%,0.25W	01121	CB1025
R661	321-0247-00			RES.,FXD,FILM:3.65K OHM,1%,0.125W	91637	MFF1816G36500F
R662	315-0101-03			RES.,FXD,CMPSN:100 OHM,5%,0.25W	01121	CB1015
R663	315-0472-00			RES.,FXD,CMPSN:4.7K OHM,5%,0.25W	01121	CB4725
R670	307-0103-00			RES.,FXD,CMPSN:2.7 OHM,5%,0.25W	01121	CB27G5
R672	307-0103-00			RES.,FXD,CMPSN:2.7 OHM,5%,0.25W	01121	CB27G5
R686	311-1555-00			RES.,VAR,NONWIR:100K OHM,20%,0.50W	73138	91A R2500
R687	311-1555-00			RES.,VAR,NONWIR:100K OHM,20%,0.5W	73138	91A R100K
R691	311-1561-00			RES.,VAR,NONWIR:2.5K OHM,20%,0.5W	73138	91A R100K
R695	311-1555-00			RES.,VAR,NONWIR:100K OHM,20%,0.5W	73138	91A R100K
R770	321-0222-00			RES.,FXD,FILM:2K OHM,1%,0.125W	91637	MFF1816G20000F
R772	321-0244-00			RES.,FXD,FILM:3.4K OHM,1%,0.125W	91637	MFF1816G34000F
R775	321-0222-00			RES.,FXD,FILM:2K OHM,1%,0.125W	91637	MFF1816G20000F
R776	321-0217-00			RES.,FXD,FILM:1.78K OHM,1%,0.125W	91637	MFF1816G17800F
R777	321-0283-00			RES.,FXD,FILM:8.66K OHM,1%,0.125W	91637	MFF1816G86600F
R781	315-0102-00			RES.,FXD,CMPSN:1K OHM,5%,0.25W	01121	CB1025
R782	321-0276-00			RES.,FXD,FILM:7.32K OHM,1%,0.125W	91637	MFF1816G73200F
R783	321-0289-00			RES.,FXD,FILM:10K OHM,1%,0.125W	91637	MFF1816G10001F
R784	321-0193-00			RES.,FXD,FILM:1K OHM,1%,0.125W	91637	MFF1816G10000F
R785	321-0193-00			RES.,FXD,FILM:1K OHM,1%,0.125W	91637	MFF1816G10000F
R789	321-0283-00			RES.,FXD,FILM:8.66K OHM,1%,0.125W	91637	MFF1816G86600F
R791	321-0193-00			RES.,FXD,FILM:1K OHM,1%,0.125W	91637	MFF1816G10000F
R793	321-0193-00			RES.,FXD,FILM:1K OHM,1%,0.125W	91637	MFF1816G10000F
R794	321-0289-00			RES.,FXD,FILM:10K OHM,1%,0.125W	91637	MFF1816G10001F
T154	120-1026-00			XFMR,RF:TOROID,2 WINDINGS	80009	120-1026-00
T314	120-1028-00			XFMR,PWR,SDN SU:HIGH VOLTAGE	80009	120-1028-00

Ckt No.	Tektronix Part No.	Serial/Model No. Eff	Dscont	Name & Description	Mfr Code	Mfr Part Number
U31	156-0067-00			MICROCIRCUIT,LI:OPERATIONAL AMPLIFIER	80009	156-0067-00
U155	156-0162-00			MICROCIRCUIT,LI:DIFFERENTIAL VIDEO AMPL	80009	156-0162-00
U184	156-0158-00			MICROCIRCUIT,LI:DUAL OPERATIONAL AMPLIFIER	80009	156-0158-00
U255	156-0096-00			MICROCIRCUIT,LI:VOLTAGE COMPARATOR	27014	LM311H
U445	156-0067-00			MICROCIRCUIT,LI:OPERATIONAL AMPLIFIER	80009	156-0067-00
U485	155-0152-00			MICROCIRCUIT,LI:GEOMETRY FOCUS CORR	80009	155-0152-00
U552	156-0145-00			MICROCIRCUIT,DI:QUAD 2-INPUT POS NAND BFR	01295	SN7438N
U555	156-0093-00			MICROCIRCUIT,DI:HEX.INVERTER	01295	SN7416N
U557	156-0706-00			MICROCIRCUIT,DI:DUAL MONOSTABLE MV	01295	SN74221N
U561	156-0093-00			MICROCIRCUIT,DI:HEX.INVERTER	01295	SN7416N
U566	156-0706-00			MICROCIRCUIT,DI:DUAL MONOSTABLE MV	01295	SN74221N
U585	155-0154-00			MICROCIRCUIT,LI:CHANNEL SWITCH	80009	155-0154-00
VR196	152-0195-00			SEMICOND DEVICE:ZENER,0.4W,5.1V,5%	80009	152-0195-00
VR265	152-0394-00			SEMICOND DEVICE:ZENER,1W,47V,5%	81483	1N3036B
VR266	152-0087-00			SEMICOND DEVICE:ZENER,1W,100V,5%	04713	SZ1627
VR358	152-0278-00			SEMICOND DEVICE:ZENER,0.4W,3V,5%	07910	1N4372A
VR573	152-0166-00			SEMICOND DEVICE:ZENER,0.4W,6.2V,5%	81483	69-9035
VR575	152-0166-00			SEMICOND DEVICE:ZENER,0.4W,6.2V,5%	81483	69-9035
VR592	152-0166-00			SEMICOND DEVICE:ZENER,0.4W,6.2V,5%	81483	69-9035
VR593	152-0166-00			SEMICOND DEVICE:ZENER,0.4W,6.2V,5%	81483	69-9035
				A5 KEYBOARD:CALCULATOR,W/KEY CAPS		
C1	283-0010-00			CAP.,FXD,CER DI:0.05UF,+100-20%,50V	56289	273C20
C2	283-0010-00			CAP.,FXD,CER DI:0.05UF,+100-20%,50V	56289	273C20
R1	315-0472-00			RES.,FXD,CMPSN:4.7K OHM,5%,0.25W	01121	CB4725
R2	315-0472-00			RES.,FXD,CMPSN:4.7K OHM,5%,0.25W	01121	CB4725
R3	315-0472-00			RES.,FXD,CMPSN:4.7K OHM,5%,0.25W	01121	CB4725
R4	315-0472-00			RES.,FXD,CMPSN:4.7K OHM,5%,0.25W	01121	CB4725
R5	315-0472-00			RES.,FXD,CMPSN:4.7K OHM,5%,0.25W	01121	CB4725
R6	315-0472-00			RES.,FXD,CMPSN:4.7K OHM,5%,0.25W	01121	CB4725
R7	315-0472-00			RES.,FXD,CMPSN:4.7K OHM,5%,0.25W	01121	CB4725
R8	315-0472-00			RES.,FXD,CMPSN:4.7K OHM,5%,0.25W	01121	CB4725
R9	315-0472-00			RES.,FXD,CMPSN:4.7K OHM,5%,0.25W	01121	CB4725
R10	315-0472-00			RES.,FXD,CMPSN:4.7K OHM,5%,0.25W	01121	CB4725
R11	315-0472-00			RES.,FXD,CMPSN:4.7K OHM,5%,0.25W	01121	CB4725
R12	315-0472-00			RES.,FXD,CMPSN:4.7K OHM,5%,0.25W	01121	CB4725
U1	156-0929-00			MICROCIRCUIT,DI:4-16 LINE DECODER	01295	SN74159
U2	156-0075-00			MICROCIRCUIT,DI:SGL 8-BIT DATA SEL MUX	80009	156-0075-00
U3	156-0032-00			MICROCIRCUIT,DI:4-BIT BINARY COUNTER	01295	SN7493AN
U4	156-0032-00			MICROCIRCUIT,DI:4-BIT BINARY COUNTER	01295	SN7493AN
U5	156-0039-00			MICROCIRCUIT,DI:DUAL J-K FLIP FLOP	01295	SN7473N
U6	156-0030-00			MICROCIRCUIT,DI:QUAD 2-INPUT POS NAND GATE	01295	SN7400N

Ckt No.	Tektronix Part No.	Serial/Model No. Eff	Dscont	Name & Description	Mfr Code	Mfr Part Number
				A6 CKT BOARD ASSY:TAPE DRIVE		
C21	283-0081-00			CAP.,FXD,CER DI:0.1UF,+80-20%,25V	56289	36C600
C22	283-0081-00			CAP.,FXD,CER DI:0.1UF,+80-20%,25V	56289	36C600
C101	281-0525-00			CAP.,FXD,CER DI:470PF,+/-94PF,500V	04222	7001-1364
C129	281-0504-00			CAP.,FXD,CER DI:10PF,+/-1PF,500V	72982	301-055C0G0100F
C131	283-0010-00			CAP.,FXD,CER DI:0.05UF,+100-20%,50V	56289	273C20
C138	281-0504-00			CAP.,FXD,CER DI:10PF,+/-1PF,500V	72982	301-055C0G0100F
C221	281-0523-00			CAP.,FXD,CER DI:100PF,+/-20PF,500V	72982	301-000U2M0101M
C222	283-0010-00			CAP.,FXD,CER DI:0.05UF,+100-20%,50V	56289	273C20
C231	283-0081-00			CAP.,FXD,CER DI:0.1UF,+80-20%,25V	56289	36C600
C232	283-0081-00			CAP.,FXD,CER DI:0.1UF,+80-20%,25V	56289	36C600
C238	281-0523-00			CAP.,FXD,CER DI:100PF,+/-20PF,500V	72982	301-000U2M0101M
C312	281-0605-00			CAP.,FXD,CER DI:200PF,10%,500V	04222	7001-1375
C313	281-0605-00			CAP.,FXD,CER DI:200PF,10%,500V	04222	7001-1375
C371	283-0010-00			CAP.,FXD,CER DI:0.05UF,+100-20%,50V	56289	273C20
C391	281-0523-00			CAP.,FXD,CER DI:100PF,+/-20PF,500V	72982	301-000U2M0101M
C392	281-0523-00			CAP.,FXD,CER DI:100PF,+/-20PF,500V	72982	301-000U2M0101M
C393	283-0065-00			CAP.,FXD,CER DI:0.001UF,5%,100V	72982	805-505B102J
C394	283-0065-00			CAP.,FXD,CER DI:0.001UF,5%,100V	72982	805-505B102J
C480	283-0083-00			CAP.,FXD,CER DI:0.0047UF,20%,500V	72982	811-565C472J
C481	283-0010-00			CAP.,FXD,CER DI:0.05UF,+100-20%,50V	56289	273C20
C482	285-1067-00			CAP.,FXD,PLSTC:0.5UF,1%,200V	14752	230B1C504F
C495	283-0010-00			CAP.,FXD,CER DI:0.05UF,+100-20%,50V	56289	273C20
C521	290-0297-00			CAP.,FXD,ELCTLT:39UF,10%,10V	56289	150D396X9010B2
C531	283-0081-00			CAP.,FXD,CER DI:0.1UF,+80-20%,25V	56289	36C600
C541	283-0081-00			CAP.,FXD,CER DI:0.1UF,+80-20%,25V	56289	36C600
C581	285-1067-00			CAP.,FXD,PLSTC:0.5UF,1%,200V	14752	230B1C504F
C590	283-0119-00			CAP.,FXD,CER DI:2200PF,5%,200V	72982	855-535B222J
C591	283-0119-00			CAP.,FXD,CER DI:2200PF,5%,200V	72982	855-535B222J
C592	283-0111-00			CAP.,FXD,CER DI:0.1UF,20%,50V	72982	8121-N088Z5U104M
C593	283-0119-00			CAP.,FXD,CER DI:2200PF,5%,200V	72982	855-535B222J
C595	283-0177-00			CAP.,FXD,CER DI:1UF,+80-20%,25V	72982	8131N039 E 105Z
C596	283-0003-00			CAP.,FXD,CER DI:0.01UF,+80-20%,150V	72982	855-558Z5U-103Z
CR1	152-0141-02			SEMICOND DEVICE:SILICON,30V,150MA	07910	1N4152
CR2	152-0141-02			SEMICOND DEVICE:SILICON,30V,150MA	07910	1N4152
CR3	152-0141-02			SEMICOND DEVICE:SILICON,30V,150MA	07910	1N4152
CR4	152-0141-02			SEMICOND DEVICE:SILICON,30V,150MA	07910	1N4152
CR120	152-0141-02			SEMICOND DEVICE:SILICON,30V,150MA	07910	1N4152
CR121	152-0141-02			SEMICOND DEVICE:SILICON,30V,150MA	07910	1N4152
CR122	152-0141-02			SEMICOND DEVICE:SILICON,30V,150MA	07910	1N4152
CR136	152-0141-02			SEMICOND DEVICE:SILICON,30V,150MA	07910	1N4152
CR137	152-0141-02			SEMICOND DEVICE:SILICON,30V,150MA	07910	1N4152
CR138	152-0141-02			SEMICOND DEVICE:SILICON,30V,150MA	07910	1N4152
CR139	152-0141-02			SEMICOND DEVICE:SILICON,30V,150MA	07910	1N4152
CR201	152-0141-02			SEMICOND DEVICE:SILICON,30V,150MA	07910	1N4152
CR202	152-0141-02			SEMICOND DEVICE:SILICON,30V,150MA	07910	1N4152
CR203	152-0141-02			SEMICOND DEVICE:SILICON,30V,150MA	07910	1N4152
CR204	152-0141-02			SEMICOND DEVICE:SILICON,30V,150MA	07910	1N4152
CR205	152-0141-02			SEMICOND DEVICE:SILICON,30V,150MA	07910	1N4152
CR311	152-0141-02			SEMICOND DEVICE:SILICON,30V,150MA	07910	1N4152
CR312	152-0141-02			SEMICOND DEVICE:SILICON,30V,150MA	07910	1N4152
CR313	152-0141-02			SEMICOND DEVICE:SILICON,30V,150MA	07910	1N4152
CR314	152-0141-02			SEMICOND DEVICE:SILICON,30V,150MA	07910	1N4152

Ckt No.	Tektronix Part No.	Serial/Model No. Eff	Dscont	Name & Description	Mfr Code	Mfr Part Number
CR461	152-0141-02			SEMICOND DEVICE:SILICON,30V,150MA	07910	1N4152
CR580	152-0107-00			SEMICOND DEVICE:SILICON,400V,400MA	80009	152-0107-00
CR590	152-0107-00			SEMICOND DEVICE:SILICON,400V,400MA	80009	152-0107-00
Q391	151-0192-00			TRANSISTOR:SILICON,NPN,SEL FROM MPS6521	80009	151-0192-00
Q392	151-0192-00			TRANSISTOR:SILICON,NPN,SEL FROM MPS6521	80009	151-0192-00
Q451	151-0188-00			TRANSISTOR:SILICON,PNP	01295	2N3906
Q461	151-0190-00			TRANSISTOR:SILICON,NPN	80009	151-0190-00
Q462	151-0190-00			TRANSISTOR:SILICON,NPN	80009	151-0190-00
Q463	151-0190-00			TRANSISTOR:SILICON,NPN	80009	151-0190-00
Q464	151-0190-00			TRANSISTOR:SILICON,NPN	80009	151-0190-00
Q491	151-0190-00			TRANSISTOR:SILICON,NPN	80009	151-0190-00
Q531	151-0188-00			TRANSISTOR:SILICON,PNP	01295	2N3906
Q541	151-0188-00			TRANSISTOR:SILICON,PNP	01295	2N3906
Q551	151-0190-00			TRANSISTOR:SILICON,NPN	80009	151-0190-00
Q561	151-1066-00			TRANSISTOR:SILICON,FE,P-CHANNEL	80009	151-1066-00
Q581	151-0188-00			TRANSISTOR:SILICON,PNP	01295	2N3906
Q582	151-0190-00			TRANSISTOR:SILICON,NPN	80009	151-0190-00
R1	321-0807-00			RES.,FXD,FILM:900K OHM,1%,0.125W	91637	HFF1104F90002F
R2	321-0246-00			RES.,FXD,FILM:3.57K OHM,1%,0.125W	91637	MFF1816G35700F
R3	321-0246-00			RES.,FXD,FILM:3.57K OHM,1%,0.125W	91637	MFF1816G35700F
R4	315-0473-00			RES.,FXD,CMPSN:47K OHM,5%,0.25W	01121	CB4735
R5	315-0473-00			RES.,FXD,CMPSN:47K OHM,5%,0.25W	01121	CB4735
R6	315-0153-00			RES.,FXD,CMPSN:15K OHM,5%,0.25W	01121	CB1535
R7	315-0153-00			RES.,FXD,CMPSN:15K OHM,5%,0.25W	01121	CB1535
R8	311-1235-00			RES.,VAR,NONWIR:100K OHM,20%,0.50W	32997	3386F-T04-104
R9	311-1235-00			RES.,VAR,NONWIR:100K OHM,20%,0.50W	32997	3386F-T04-104
R21	321-0807-00			RES.,FXD,FILM:900K OHM,1%,0.125W	91637	HFF1104F90002F
R100	321-0354-00			RES.,FXD,FILM:47.5K OHM,1%,0.125W	91637	MFF1816G47501F
R101	321-0354-00			RES.,FXD,FILM:47.5K OHM,1%,0.125W	91637	MFF1816G47501F
R121	321-0354-00			RES.,FXD,FILM:47.5K OHM,1%,0.125W	91637	MFF1816G47501F
R122	321-0354-00			RES.,FXD,FILM:47.5K OHM,1%,0.125W	91637	MFF1816G47501F
R127	315-0100-00			RES.,FXD,CMPSN:10 OHM,5%,0.25W	01121	CB1005
R128	315-0100-00			RES.,FXD,CMPSN:10 OHM,5%,0.25W	01121	CB1005
R129	321-0807-00			RES.,FXD,FILM:900K OHM,1%,0.125W	91637	HFF1104F90002F
R136	315-0473-00			RES.,FXD,CMPSN:47K OHM,5%,0.25W	01121	CB4735
R137	321-0246-00			RES.,FXD,FILM:3.57K OHM,1%,0.125W	91637	MFF1816G35700F
R138	321-0246-00			RES.,FXD,FILM:3.57K OHM,1%,0.125W	91637	MFF1816G35700F
R139	321-0807-00			RES.,FXD,FILM:900K OHM,1%,0.125W	91637	HFF1104F90002F
R149	315-0473-00			RES.,FXD,CMPSN:47K OHM,5%,0.25W	01121	CB4735
R150	315-0473-00			RES.,FXD,CMPSN:47K OHM,5%,0.25W	01121	CB4735
R201	315-0102-00			RES.,FXD,CMPSN:1K OHM,5%,0.25W	01121	CB1025
R204	315-0102-00			RES.,FXD,CMPSN:1K OHM,5%,0.25W	01121	CB1025
R205	315-0912-00			RES.,FXD,CMPSN:9.1K OHM,5%,0.25W	01121	CB9125
R230	321-0260-00			RES.,FXD,FILM:4.99K OHM,1%,0.125W	91637	MFF1816G49900F
R231	315-0394-00			RES.,FXD,CMPSN:390K OHM,5%,0.25W	01121	CB3945
R232	315-0394-00			RES.,FXD,CMPSN:390K OHM,5%,0.25W	01121	CB3945
R234	321-0260-00			RES.,FXD,FILM:4.99K OHM,1%,0.125W	91637	MFF1816G49900F
R235	315-0912-00			RES.,FXD,CMPSN:9.1K OHM,5%,0.25W	01121	CB9125
R237	315-0203-00			RES.,FXD,CMPSN:20K OHM,5%,0.25W	01121	CB2035
R238	315-0203-00			RES.,FXD,CMPSN:20K OHM,5%,0.25W	01121	CB2035
R301	321-0371-00			RES.,FXD,FILM:71.5K OHM,1%,0.125W	91637	MFF1816G71501F
R302	321-0371-00			RES.,FXD,FILM:71.5K OHM,1%,0.125W	91637	MFF1816G71501F

Ckt No.	Tektronix Part No.	Serial/Model No. Eff	Dscont	Name & Description	Mfr Code	Mfr Part Number
R303	315-0104-00			RES.,FXD,CMPSN:100K OHM,5%,0.25W	01121	CB1045
R304	315-0104-00			RES.,FXD,CMPSN:100K OHM,5%,0.25W	01121	CB1045
R307	315-0752-00			RES.,FXD,CMPSN:7.5K OHM,5%,0.25W	01121	CB7525
R308	315-0752-00			RES.,FXD,CMPSN:7.5K OHM,5%,0.25W	01121	CB7525
R309	315-0512-00			RES.,FXD,CMPSN:5.1K OHM,5%,0.25W	01121	CB5125
R310	315-0512-00			RES.,FXD,CMPSN:5.1K OHM,5%,0.25W	01121	CB5125
R371	315-0102-00			RES.,FXD,CMPSN:1K OHM,5%,0.25W	01121	CB1025
R391	315-0472-00			RES.,FXD,CMPSN:4.7K OHM,5%,0.25W	01121	CB4725
R392	315-0472-00			RES.,FXD,CMPSN:4.7K OHM,5%,0.25W	01121	CB4725
R393	315-0473-00			RES.,FXD,CMPSN:47K OHM,5%,0.25W	01121	CB4735
R394	315-0473-00			RES.,FXD,CMPSN:47K OHM,5%,0.25W	01121	CB4735
R421	315-0203-00			RES.,FXD,CMPSN:20K OHM,5%,0.25W	01121	CB2035
R431	315-0102-00			RES.,FXD,CMPSN:1K OHM,5%,0.25W	01121	CB1025
R451	315-0103-00			RES.,FXD,CMPSN:10K OHM,5%,0.25W	01121	CB1035
R452	315-0103-00			RES.,FXD,CMPSN:10K OHM,5%,0.25W	01121	CB1035
R453	315-0103-00			RES.,FXD,CMPSN:10K OHM,5%,0.25W	01121	CB1035
R454	315-0103-00			RES.,FXD,CMPSN:10K OHM,5%,0.25W	01121	CB1035
R455	315-0512-00			RES.,FXD,CMPSN:5.1K OHM,5%,0.25W	01121	CB5125
R462	315-0473-00			RES.,FXD,CMPSN:47K OHM,5%,0.25W	01121	CB4735
R463	315-0103-00			RES.,FXD,CMPSN:10K OHM,5%,0.25W	01121	CB1035
R464	315-0473-00			RES.,FXD,CMPSN:47K OHM,5%,0.25W	01121	CB4735
R465	321-0329-00			RES.,FXD,FILM:26.1K OHM,1%,0.125W	91637	MFF1816G26101F
R466	315-0183-00			RES.,FXD,CMPSN:18K OHM,5%,0.25W	01121	CB1835
R467	315-0822-00			RES.,FXD,CMPSN:8.2K OHM,5%,0.25W	01121	CB8225
R482	321-0380-00			RES.,FXD,FILM:88.7K OHM,1%,0.125W	91637	MFF1816G88701F
R490	315-0910-00			RES.,FXD,CMPSN:91 OHM,5%,0.25W	01121	CB9105
R491	315-0512-00			RES.,FXD,CMPSN:5.1K OHM,5%,0.25W	01121	CB5125
R492	315-0202-00			RES.,FXD,CMPSN:2K OHM,5%,0.25W	01121	CB2025
R493	315-0201-00			RES.,FXD,CMPSN:200 OHM,5%,0.25W	01121	CB2015
R494	307-0111-00			RES.,FXD,CMPSN:3.6 OHM,5%,0.25W	01121	CB36G5
R521	315-0203-00			RES.,FXD,CMPSN:20K OHM,5%,0.25W	01121	CB2035
R531	315-0103-00			RES.,FXD,CMPSN:10K OHM,5%,0.25W	01121	CB1035
R541	315-0472-00			RES.,FXD,CMPSN:4.7K OHM,5%,0.25W	01121	CB4725
R542	315-0103-00			RES.,FXD,CMPSN:10K OHM,5%,0.25W	01121	CB1035
R551	315-0103-00			RES.,FXD,CMPSN:10K OHM,5%,0.25W	01121	CB1035
R552	315-0103-00			RES.,FXD,CMPSN:10K OHM,5%,0.25W	01121	CB1035
R561	315-0103-00			RES.,FXD,CMPSN:10K OHM,5%,0.25W	01121	CB1035
R562	321-0337-00			RES.,FXD,FILM:31.6K OHM,1%,0.125W	91637	MFF1816G31601F
R563	321-0327-00			RES.,FXD,FILM:24.9K OHM,1%,0.125W	91637	MFF1816G24901F
R564	315-0473-00			RES.,FXD,CMPSN:47K OHM,5%,0.25W	01121	CB4735
R565	321-0228-00			RES.,FXD,FILM:2.32K OHM,1%,0.125W	91637	MFF1816G23200F
R566	315-0205-00			RES.,FXD,CMPSN:2M OHM,5%,0.25W	01121	CB2055
R567	315-0112-00			RES.,FXD,CMPSN:1.1K OHM,5%,0.25W	01121	CB1125
R570	321-0242-00			RES.,FXD,FILM:3.24K OHM,1%,0.125W	91637	MFF1816G32400F
R571	321-0289-00			RES.,FXD,FILM:10K OHM,1%,0.125W	91637	MFF1816G10001F
R572	321-0318-00			RES.,FXD,FILM:20K OHM,1%,0.125W	91637	MFF1816G20001F
R573	311-1232-00			RES.,VAR,NONWIR:50K OHM,20%,0.50W	32997	3386F-T04-503
R574	315-0824-00			RES.,FXD,CMPSN:820K OHM,5%,0.25W	01121	CB8245
R580	315-0102-00			RES.,FXD,CMPSN:1K OHM,5%,0.25W	01121	CB1025
R581	321-0395-00			RES.,FXD,FILM:127K OHM,1%,0.125W	91637	MFF1816G12702F
R582	315-0681-00			RES.,FXD,CMPSN:680 OHM,5%,0.25W	01121	CB6815
R583	315-0134-00			RES.,FXD,CMPSN:130K OHM,5%,0.25W	01121	CB1345
R584	321-0285-00			RES.,FXD,FILM:9.09K OHM,1%,0.125W	91637	MFF1816G90900F

Ckt No.	Tektronix Part No.	Serial/Model No. Eff	Dscont	Name & Description	Mfr Code	Mfr Part Number
R585	315-0102-00			RES.,FXD,CMPSN:1K OHM,5%,0.25W	01121	CB1025
R586	315-0681-00			RES.,FXD,CMPSN:680 OHM,5%,0.25W	01121	CB6815
R587	315-0202-00			RES.,FXD,CMPSN:2K OHM,5%,0.25W	01121	CB2025
R588	315-0621-00			RES.,FXD,CMPSN:620 OHM,5%,0.25W	01121	CB6215
R589	315-0102-00			RES.,FXD,CMPSN:1K OHM,5%,0.25W	01121	CB1025
R590	315-0102-00			RES.,FXD,CMPSN:1K OHM,5%,0.25W	01121	CB1025
R591	315-0474-00			RES.,FXD,CMPSN:470K OHM,5%,0.25W	01121	CB4745
R593	315-0564-00			RES.,FXD,CMPSN:560K OHM,5%,0.25W	01121	CB5645
R594	321-0155-00			RES.,FXD,FILM:402 OHM,1%,0.125W	91637	MFF1816G402R0F
R595	321-0612-00			RES.,FXD,FILM:500 OHM,1%,0.125W	91637	MFF1816G500R0F
R596	315-0104-00			RES.,FXD,CMPSN:100K OHM,5%,0.25W	01121	CB1045
R597	311-1224-00			RES.,VAR,NONWIR:500 OHM,20%,0.50W	32997	3386F-T04-501
U21	156-0317-00			MICROCIRCUIT,LI:OPERATIONAL AMPLIFLIER	34371	HA2-2625-5
U100	156-0158-00			MICROCIRCUIT,LI:DUAL OPERATIONAL AMPLIFIER	80009	156-0158-00
U121	156-0317-00			MICROCIRCUIT,LI:OPERATIONAL AMPLIFLIER	34371	HA2-2625-5
U131	156-0112-00			MICROCIRCUIT,DI:QUAD 2-INPUT POS NAND GATE	01295	SN7426N
U221	156-0383-00			MICROCIRCUIT,DI:QUAD 2-INPUT NOR GATE	01295	SN74LS02N
U231	156-0487-00			MICROCIRCUIT,LI:DUAL RETRIG,ONE SHOT	07263	96L02PC
U301	156-0096-00			MICROCIRCUIT,LI:VOLTAGE COMPARATOR	27014	LM311H
U311	156-0096-00			MICROCIRCUIT,LI:VOLTAGE COMPARATOR	27014	LM311H
U351	156-0382-00			MICROCIRCUIT,DI:QUAD 2-INPUT NAND GATE	01295	SN74LS00N
U361	156-0387-00			MICROCIRCUIT,DI:DUAL J-K NEG EDGE TRIG	01295	SN74LS73N
U371	156-0388-00			MICROCIRCUIT,DI:DUAL D-TYPE FLIP-FLOP	01295	SN74LS74N
U381	156-0382-00			MICROCIRCUIT,DI:QUAD 2-INPUT NAND GATE	01295	SN74LS00N
U391	156-0371-00			MICROCIRCUIT,DI:QUAD 2-INPUT NAND ST	01295	SN74132N
U421	156-0385-00			MICROCIRCUIT,DI:HEX.INVERTER	01295	SN74LS04N
U431	156-0112-00			MICROCIRCUIT,DI:QUAD 2-INPUT POS NAND GATE	01295	SN7426N
U481	156-0487-00			MICROCIRCUIT,LI:DUAL RETRIG,ONE SHOT	07263	96L02PC
U491	156-0383-00			MICROCIRCUIT,DI:QUAD 2-INPUT NOR GATE	01295	SN74LS02N
U495	156-0388-00			MICROCIRCUIT,DI:DUAL D-TYPE FLIP-FLOP	01295	SN74LS74N
U581	156-0158-00			MICROCIRCUIT,LI:DUAL OPERATIONAL AMPLIFIER	80009	156-0158-00
U591	156-0158-00			MICROCIRCUIT,LI:DUAL OPERATIONAL AMPLIFIER	80009	156-0158-00
VR464	152-0226-00			SEMICOND DEVICE:ZENER,0.4W,5.1V,5%	81483	69-6584
VR567	152-0127-00			SEMICOND DEVICE:ZENER,0.4W,7.5V,5%	04713	1N958B
VR568	152-0127-00			SEMICOND DEVICE:ZENER,0.4W,7.5V,5%	04713	1N958B
				A7 CKT BOARD ASSY:STATUS W/MICRO SWITCH		
DS1	150-0057-01			LAMP,INCAND:5V,0.115A	87034	17AS15
Q1	151-0313-00	B010151	B041005	TRANSISTOR:SILICON,NPN	80009	151-0313-00
Q1	151-0628-00	B041006		TRANSISTOR:SILICON,NPN	07263	FPT120A
Q2	151-0313-00	B010100	B041005	TRANSISTOR:SILICON,NPN	80009	151-0313-00
Q2	151-0628-00	B041006		TRANSISTOR:SILICON,NPN	07263	FPT120A
R1	315-0475-00	XB041006		RES.,FXD,CMPSN:4.7M OHM,5%,0.25W	01121	CB4755
R2	315-0475-00	XB041006		RES.,FXD,CMPSN:4.7M OHM,5%,0.25W	01121	CB4755
R3	315-0102-00	XB041006		RES.,FXD,CMPSN:1K OHM,5%,0.25W	01121	CB1025
R5	315-0102-00			RES.,FXD,CMPSN:1K OHM,5%,0.25W	01121	CB1025
S1	260-1748-00			SWITCH,PUSH:SPDT,0.1A,125VAC,LVR ACTR	01963	E63-02HB
S2	260-1748-00			SWITCH,PUSH:SPDT,0.1A,125VAC,LVR ACTR	01963	E63-02HB

Ckt No.	Tektronix Part No.	Serial/Model No. Eff	Dscont	Name & Description	Mfr Code	Mfr Part Number
				A8 CKT BOARD ASSY:INDICATOR LIGHT	A8 CKT BOAR	
DS60	150-0180-00			LAMP,INCAND:12V,0.06A	71744	CM7219
DS61	150-0180-00			LAMP,INCAND:12V,0.06A	71744	CM7219
DS62	150-0180-00			LAMP,INCAND:12V,0.06A	71744	CM7219
DS63	150-0180-00			LAMP,INCAND:12V,0.06A	71744	CM7219
R60	315-0470-00			RES.,FXD,CMPSN:47 OHM,5%,0.25W	01121	CB4705
R61	315-0470-00			RES.,FXD,CMPSN:47 OHM,5%,0.25W	01121	CB4705
R62	315-0470-00			RES.,FXD,CMPSN:47 OHM,5%,0.25W	01121	CB4705
R63	315-0300-00			RES.,FXD,CMPSN:30 OHM,5%,0.25W	01121	CB3005
				CHASSIS PARTS		
B1001	119-0721-00			FAN,VENTILATING:	80009	119-0721-00
B1090	147-0045-00			MOTOR,DC:6V,17000 RPM	50778	OBD
B1092	147-0046-00			MOTOR,DC:TAPE,DRIVE,12V	98939	9413B254
C1091	283-0000-00			CAP.,FXD,CER DI:0.001UF,+100-0%,500V	72982	831-516E102P
C1092	283-0000-00			CAP.,FXD,CER DI:0.001UF,+100-0%,500V	72982	831-516E102P
L1012A,B	119-0745-00			COIL,TUBE DEFL:	80009	119-0745-00
LS60	119-0305-00			LOUDSPEAKER,PM:PERMANENT MAGNET,45 OHM,2W	07109	35A45C
Q1036	151-0423-00			TRANSISTOR:SILICON,NPN	01295	TIP50
Q1039	151-0423-00			TRANSISTOR:SILICON,NPN	01295	TIP50
Q1044	151-0423-00			TRANSISTOR:SILICON,NPN	01295	TIP50
Q1059	151-0423-00			TRANSISTOR:SILICON,NPN	01295	TIP50
Q1067	151-0423-00			TRANSISTOR:SILICON,NPN	01295	TIP50
Q1069	151-0349-00			TRANSISTOR:SILICON,NPN,SEL FROM MJE2801	80009	151-0349-00
Q1074	151-0373-00			TRANSISTOR:SILICON,PNP	80009	151-0373-00
Q1084	151-0349-00			TRANSISTOR:SILICON,NPN,SEL FROM MJE2801	80009	151-0349-00
Q1096	151-0373-00			TRANSISTOR:SILICON,PNP	80009	151-0373-00
Q1091	151-0607-00			TRANSISTOR:SILICON,PNP	01295	TIP147
Q1092	151-0606-00			TRANSISTOR:SILICON,NPN	01295	TIP142
R1050	311-1099-00			RES.,VAR,NONWIR:100K OHM,0.5W	01121	WA1G040S104AZ
V1	154-0624-11			ELECTRON TUBE:CRT	80009	154-0624-11

REPLACEABLE MECHANICAL PARTS

PARTS ORDERING INFORMATION

Replacement parts are available from or through your local Tektronix, Inc. Field Office or representative.

Changes to Tektronix instruments are sometimes made to accommodate improved components as they become available, and to give you the benefit of the latest circuit improvements developed in our engineering department. It is therefore important, when ordering parts, to include the following information in your order: Part number, instrument type or number, serial number, and modification number if applicable.

If a part you have ordered has been replaced with a new or improved part, your local Tektronix, Inc. Field Office or representative will contact you concerning any change in part number.

Change information, if any, is located at the rear of this manual.

SPECIAL NOTES AND SYMBOLS

X000	Part first added at this serial number
00X	Part removed after this serial number

FIGURE AND INDEX NUMBERS

Items in this section are referenced by figure and index numbers to the illustrations.

INDENTATION SYSTEM

This mechanical parts list is indented to indicate item relationships. Following is an example of the indentation system used in the description column.

1 2 3 4 5 *Name & Description*

Assembly and/or Component
Attaching parts for Assembly and/or Component
- - - * - - -
Detail Part of Assembly and/or Component
Attaching parts for Detail Part
- - - * - - -
Parts of Detail Part
Attaching parts for Parts of Detail Part
- - - * - - -

Attaching Parts always appear in the same indentation as the item it mounts, while the detail parts are indented to the right. Indented items are part of, and included with, the next higher indentation. The separation symbol - - - * - - - indicates the end of attaching parts.

Attaching parts must be purchased separately, unless otherwise specified.

ITEM NAME

In the Parts List, an Item Name is separated from the description by a colon (:). Because of space limitations, an Item Name may sometimes appear as incomplete. For further Item Name identification, the U.S. Federal Cataloging Handbook H6-1 can be utilized where possible.

ABBREVIATIONS

"	INCH
#	NUMBER SIZE
ACTR	ACTUATOR
ADPTR	ADAPTER
ALIGN	ALIGNMENT
AL	ALUMINUM
ASSEM	ASSEMBLED
ASSY	ASSEMBLY
ATTEN	ATTENUATOR
AWG	AMERICAN WIRE GAGE
BD	BOARD
BRKT	BRACKET
BRS	BRASS
BRZ	BRONZE
BSHG	BUSHING
CAB	CABINET
CAP	CAPACITOR
CER	CERAMIC
CHAS	CHASSIS
CKT	CIRCUIT
COMP	COMPOSITION
CONN	CONNECTOR
COV	COVER
CPLG	COUPLING
CRT	CATHODE RAY TUBE
DEG	DEGREE
DWR	DRAWER
ELCTRN	ELECTRON
ELEC	ELECTRICAL
ELCTLT	ELECTROLYTIC
ELEM	ELEMENT
EPL	ELECTRICAL PARTS LIST
EQPT	EQUIPMENT
EXT	EXTERNAL
FIL	FILLISTER HEAD
FLEX	FLEXIBLE
FLH	FLAT HEAD
FLTR	FILTER
FR	FRAME or FRONT
FSTNR	FASTENER
FT	FOOT
FXD	FIXED
GSKT	GASKET
HDL	HANDLE
HEX	HEXAGON
HEX HD	HEXAGONAL HEAD
HEX SOC	HEXAGONAL SOCKET
HLCPS	HELICAL COMPRESSION
HLEXT	HELICAL EXTENSION
HV	HIGH VOLTAGE
IC	INTEGRATED CIRCUIT
ID	INSIDE DIAMETER
IDENT	IDENTIFICATION
IMPLR	IMPELLER
IN	INCH
INCAND	INCANDESCENT
INSUL	INSULATOR
INTL	INTERNAL
LPHLDR	LAMPHOLDER
MACH	MACHINE
MECH	MECHANICAL
MTG	MOUNTING
NIP	NIPPLE
NON WIRE	NOT WIRE WOUND
OBD	ORDER BY DESCRIPTION
OD	OUTSIDE DIAMETER
OVH	OVAL HEAD
PH BRZ	PHOSPHOR BRONZE
PL	PLAIN or PLATE
PLSTC	PLASTIC
PN	PART NUMBER
PNH	PAN HEAD
PWR	POWER
RCPT	RECEPTACLE
RES	RESISTOR
RGD	RIGID
RLF	RELIEF
RTNR	RETAINER
SCH	SOCKET HEAD
SCOPE	OSCILLOSCOPE
SCR	SCREW
SE	SINGLE END
SECT	SECTION
SEMICOND	SEMICONDUCTOR
SHLD	SHIELD
SHLDR	SHOULDERED
SKT	SOCKET
SL	SLIDE
SLFLKG	SELF-LOCKING
SLVG	SLEEVING
SPR	SPRING
SQ	SQUARE
SST	STAINLESS STEEL
STL	STEEL
SW	SWITCH
T	TUBE
TERM	TERMINAL
THD	THREAD
THK	THICK
TNSN	TENSION
TPG	TAPPING
TRH	TRUSS HEAD
V	VOLTAGE
VAR	VARIABLE
W/	WITH
WSHR	WASHER
XFMR	TRANSFORMER
XSTR	TRANSISTOR

CROSS INDEX—MFR. CODE NUMBER TO MANUFACTURER

Mfr. Code	Manufacturer	Address	City, State, Zip
000AC	LINCOLN & ALLEN COMPANY	3460 NW INDUSTRIAL	PORTLAND, OR 97210
000AE	GARDNER SPRING COMPANY	1115 N UTICA	TULSA, OK 74110
000AH	STANDARD PRESSED STEEL CO., UNBRAKO DIV.	8535 DICE ROAD	SANTA FE SPRINGS, CA 90670
0000P	3M COMPANY, DATA PRODUCTS DIVISION	300 LEWIS ROAD	CAMARILLO, CA 97010
00779	AMP, INC.	P O BOX 3608	HARRISBURG, PA 17105
01295	TEXAS INSTRUMENTS, INC., SEMICONDUCTOR GROUP	P O BOX 5012, 13500 N CENTRAL EXPRESSWAY	DALLAS, TX 75222
01881	ANACONDA AMERICAN BRASS COMPANY, A DIV. OF ANACONDA COMPANY	414 MEADOW STREET	WATERBURY, CT 06720
01963	CHERRY ELECTRICAL PRODUCTS CORPORATION	3600 SUNSET AVENUE	WAUKEGAN, IL 60085
04713	MOTOROLA, INC., SEMICONDUCTOR PROD. DIV.	5005 E MCDOWELL RD,PO BOX 20923	PHOENIX, AZ 85036
04963	MINNESOTA MINING AND MFG. CO., ADHESIVES COATINGS AND SEALERS DIVISION	3M CENTER	ST. PAUL, MN 55101
05574	VIKING INDUSTRIES, INC.	21001 NORDHOFF STREET	CHATSWORTH, CA 91311
05820	WAKEFIELD ENGINEERING, INC.	AUDUBON ROAD	WAKEFIELD, MA 01880
07111	PNEUMO DYNAMICS CORPORATION	4800 PRUDENTIAL TOWER	BOSTON, MA 02199
08261	SPECTRA-STRIP CORP.	7100 LAMPSON AVE.	GARDEN GROVE, CA 92642
09922	BURNDY CORPORATION	RICHARDS AVENUE	NORWALK, CT 06852
10389	CHICAGO SWITCH, INC.	2035 WABANSIA AVE.	CHICAGO, IL 60647
11897	PLASTIGLIDE MFG. CORPORATION	P O BOX 867, 1757 STANFORD ST.	SANTA MONICA, CA 90406
11983	NORTRONICS COMPANY, INC.	8101 10TH AVENUE NORTH	MINNEAPOLIS, MN 55427
12327	FREEWAY CORPORATION	9301 ALLEN DRIVE	CLEVELAND, OH 44125
12624	NORTON CO., TAPE DIV., SEALANT OPERATION	12 BENNETT DRIVE	GRANVILLE, NY 12832
20999	MINNESOTA MINING AND MFG CO., INDUSTRIAL ELECTRICAL PRODUCTS DIVISON	3M CENTER	ST. PAUL, MN 55101
22526	BERG ELECTRONICS, INC.	YOUK EXPRESSWAY	NEW CUMBERLAND, PA 17070
25941	THIOKOL CHEMICAL CORP., CHEMICAL DIV., PANELYTE PLANT	P. O. BOX 1296	TRENTON, NJ 08607
26365	GRIES REPRODUCER CO., DIV. OF COATS AND CLARK, INC.	125 BEECHWOOD AVE.	NEW ROCHELLE, NY 10802
27264	MOLEX PRODUCTS CO.	5224 KATRINE AVE.	DOWNERS GROVE, IL 60515
29587	BUNKER-RAMO CORP., AMPHENOL INDUSTRIAL DIV.	1830 S. 54TH AVE.	CHICAGO, IL 60650
52675	WILSON, J.A. LIGHTING, DIVISION OF WILSON RESEARCH CORPORATION	PO BOX 5037, 2001 PENINSULA DR.	ERIE, PA 16512
52833	KEYTRONIC CORPORATION	BLDG. 14 SPOKANE INDUSTRIAL PK.	SPOKANE, WA 99216
52905	SIMPLEX MFG. COMPANY	5224 NE 42ND AVENUE	PORTLAND, OREGON 97218
54492	CINCH COMPANY	6126 MONTECITO BLVD.,PO BOX 167	SANTA ROSA, CA 95402
59730	THOMAS AND BETTS COMPANY	36 BUTLER ST.	ELIZABETH, NJ 07207
70276	ALLEN MFG. CO.	P. O. DRAWER 570	HARTFORD, CT 06101
70485	ATLANTIC INDIA RUBBER WORKS, INC.	571 W. POLK ST.	CHICAGO, IL 60607
71468	ITT CANNON ELECTRIC	666 E. DYER RD.	SANTA ANA, CA 92702
71785	TRW, CINCH CONNECTORS	1501 MORSE AVENUE	ELK GROVE VILLAGE, IL 60007
73743	FISCHER SPECIAL MFG. CO.	446 MORGAN ST.	CINCINNATI, OH 45206
73803	TEXAS INSTRUMENTS, INC., METALLURGICAL MATERIALS DIV.	34 FOREST STREET	ATTLEBORO, MA 02703
74445	HOLO-KROME CO.	31 BROOK ST. WEST	HARTFORD, CT 06110
74921	ITEN FIBRE CO., THE	4001 BENEFIT AVE., P O BOX 9	ASHTABULA, OH 44004
75037	MINNESOTA MINING AND MFG. CO., ELECTRO PRODUCTS DIVISION	3M CENTER	ST. PAUL, MN 55101
75915	LITTELFUSE, INC.	800 E. NORTHWEST HWY	DES PLAINES, IL 60016
77250	PHEOLL MANUFACTURING CO., DIVISION OF ALLIED PRODUCTS CORP.	5700 W. ROOSEVELT RD.	CHICAGO, IL 60650
77969	RUBBERCRAFT CORP. OF CALIF., LTD.	1800 W. 220TH ST.	TORRANCE, CA 90507
78189	ILLINOIS TOOL WORKS, INC. SHAKEPROOF DIVISION	ST. CHARLES ROAD	ELGIN, IL 60120
79136	WALDES, KOHINOOR, INC.	47-16 AUSTEL PLACE	LONG ISLAND CITY, NY 11101
80009	TEKTRONIX, INC.	P O BOX 500	BEAVERTON, OR 97077
83385	CENTRAL SCREW CO.	2530 CRESCENT DR.	BROADVIEW, IL 60153
86445	PENN FIBRE AND SPECIALTY CO., INC.	2032 E. WESTMORELAND ST.	PHILADELPHIA, PA 19134
95937	FEDERAL TELEVISION DIV., CARDWELL CONDENSER CORPORATION	80 E MONTAUK HIGHWAY	LINDENHURST, NY 11757
95987	WECKESSER CO., INC.	4444 WEST IRVING PARK RD.	CHICAGO, IL 60641
98291	SEALECTRO CORP.	225 HOYT	MAMARONECK, NY 10544

Fig. & Index No.	Tektronix Part No.	Serial/Model No. Eff	Dscont	Qty	1 2 3 4 5	Name & Description	Mfr Code	Mfr Part Number
1-1	390-0490-01			1		CABINET TOP:ASSY,CALCULATOR	80009	390-0490-01
						(ATTACHING PARTS)		
-2	212-0507-00			2		SCREW,MACHINE:10-32 X 0.375 INCH,PNH STL	83385	OBD
-3	354-0290-01			2		RING,RETAINING:		
-4	212-0621-00			2		BOLT,MACHINE:10-32 X 3.75,HEX HD,SST	80009	212-0621-00
-5	210-0805-00			2		WASHER,FLAT:0.204 ID X 0.438 INCH OD,STL	12327	OBD
-6	210-0010-00			2		WASHER,LOCK:INT,0.20 ID X0.376" OD,STL	78189	1210-00-00-0541C
						- - - * - - -		
	----- -----			1		KEYBOARD:CALCULATOR,W/KEY CAPS(SEE A5 EPL)		
						(ATTACHING PARTS)		
-7	211-0542-00			2		SCREW,MACHINE:6-32 X 0.312 INCH,TRH STL	83385	OBD
-8	210-0009-00			2		WASHER,LOCK:EXT,0.193ID X0.40" OD,STL	78189	1110-00
-9	210-0803-00			2		WASHER,FLAT:0.15 ID X 0.375 INCH OD,STL	12327	OBD
						- - - * - - -		
	----- -----			-		. KEYBOARD ASSY INCLUDES:		
-10	333-2063-00			1		. PANEL,FRONT:KEYBOARD	80009	333-2063-00
						(ATTACHING PARTS)		
-11	211-0019-00			12		. SCREW,MACHINE:4-40 X 1.0 INCH,PNH STL	83385	OBD
						- - - * - - -		
-12	366-1502-00			10		. PUSH BUTTON:BLANK,LIGHT GRAY	80009	366-1502-00
-13	366-1671-00			10		. PUSH BUTTON:BLANK,DARK GRAY	80009	366-1671-00
-14	----- -----			1		. KEYBOARD:(SEE A5 EPL)		
-15	366-1712-01			1		. . PUSHBUTTON:DARK GRAY,HOME PAGE	01963	028-6886
	366-1712-02			1		. . PUSHBUTTON:DARK GRAY, /	01963	028-1716
	366-1712-03			1		. . PUSHBUTTON:LIGHT GRAY,'/1	01963	028-6680
	366-1712-04			1		. . PUSHBUTTON:LIGHT GRAY,"/2	01963	028-6681
	366-1712-05			1		. . PUSHBUTTON:LIGHT GRAY,#/3	01963	028-6682
	366-1712-06			1		. . PUSHBUTTON:LIGHT GRAY,$/4	01963	028-6683
	366-1712-07			1		. . PUSHBUTTON:LIGHT GRAY,%/5	01963	028-6684
	366-1712-08			1		. . PUSHBUTTON:LIGHT GRAY,AND/6	01963	028-6685
	366-1712-09			1		. . PUSHBUTTON:LIGHT GRAY,'/7	01963	028-6686
-16	366-1712-10			1		. . PUSHBUTTON:LIGHT GRAY,(/8	01963	028-6687
	366-1712-11			1		. . PUSHBUTTON:LIGHT GRAY,)/9	01963	028-6688
	366-1712-12			1		. . PUSHBUTTON:LIGHT GRAY,0	01963	028-6689
	366-1712-13			1		. . PUSHBUTTON:LIGHT GRAY,*/:	01963	028-6690
	366-1712-14			1		. . PUSHBUTTON:LIGHT GRAY,=/-	01963	028-6691
	366-1712-15			1		. . PUSHBUTTON:DARK GRAY, /	01963	028-1746
	366-1712-16			1		. . PUSHBUTTON:DARK GRAY,BACK SPACE	01963	028-2017
	366-1712-17			1		. . PUSHBUTTON:DARK GRAY,(	01963	028-6675
	366-1712-18			1		. . PUSHBUTTON:LIGHT GRAY,ENTER EXP	01963	028-6889
	366-1712-19			1		. . PUSHBUTTON:DARK GRAY,)	01963	028-6675
	366-1712-20			1		. . PUSHBUTTON:DARK GRAY,	01963	028-6676
	366-1712-21			1		. . PUSHBUTTON:DARK GRAY,ESC	01963	028-5087
	366-1712-22			1		. . PUSHBUTTON:DARK GRAY, /-	01963	028-6672
	366-1712-23			1		. . PUSHBUTTON:LIGHT GRAY,Q	01963	028-6692
	366-1712-24			1		. . PUSHBUTTON:LIGHT GRAY,W	01963	028-6692
	366-1712-25			1		. . PUSHBUTTON:LIGHT GRAY,E	01963	028-6694
	366-1712-26			1		. . PUSHBUTTON:LIGHT GRAY,R	01963	028-6695
	366-1712-27			1		. . PUSHBUTTON:LIGHT GRAY,T	01963	028-6696
	366-1712-28			1		. . PUSHBUTTON:LIGHT GRAY,Y	01963	028-6697
	366-1712-29			1		. . PUSHBUTTON:LIGHT GRAY,U	01963	028-6698
	366-1712-30			1		. . PUSHBUTTON:LIGHT GRAY,I	01963	028-6699
	366-1712-31			1		. . PUSHBUTTON:LIGHT GRAY,O	01963	028-6700
	366-1712-32			1		. . PUSHBUTTON:LIGHT GRAY,P	01963	028-6701
	366-1712-33			1		. . PUSHBUTTON:LIGHT GRAY, /@	01963	028-6702
	366-1712-34			1		. . PUSHBUTTON:DARK GRAY,LF	01963	028-6673
	366-1712-35			1		. . PUSHBUTTON:DARK GRAY,RETURN	01963	028-3647
	366-1712-36			1		. . PUSHBUTTON:LIGHT GRAY,7	01963	028-6723
	366-1712-37			1		. . PUSHBUTTON:LIGHT GRAY,8	01963	028-6724
	366-1712-38			1		. . PUSHBUTTON:LIGHT GRAY,9	01963	028-6725
	366-1712-39			1		. . PUSHBUTTON:DARK GRAY,/	01963	028-6677
	366-1712-40			1		. . PUSHBUTTON:DARK GRAY,TAB	01963	028-2016
	366-1712-41			1		. . PUSHBUTTON:DARK GRAY,CTRL	01963	028-3106

Fig. & Index No.	Tektronix Part No.	Serial/Model No. Eff	Dscont	Qty	1 2 3 4 5	Name & Description	Mfr Code	Mfr Part Number
1-	366-1712-78			1	. .	PUSHBUTTON:LIGHT GRAY,SPACE BAR	01963	028-3308
	366-1712-42			1	. .	PUSHBUTTON:LIGHT GRAY,A	01963	028-6703
	366-1712-43			1	. .	PUSHBUTTON:LIGHT GRAY,S	01963	028-6704
	366-1712-44			1	. .	PUSHBUTTON:LIGHT GRAY,D	01963	028-6705
	366-1712-45			1	. .	PUSHBUTTON:LIGHT GRAY,F	01963	028-6706
	366-1712-46			1	. .	PUSHBUTTON:LIGHT GRAY,G	01963	028-6707
	366-1712-47			1	. .	PUSHBUTTON:LIGHT GRAY,H	01963	028-6708
	366-1712-48			1	. .	PUSHBUTTON:LIGHT GRAY,J	01963	028-6709
	366-1712-49			1	. .	PUSHBUTTON:LIGHT GRAY,K	01963	028-6710
	366-1712-50			1	. .	PUSHBUTTON:LIGHT GRAY,L	01963	028-6711
	366-1712-51			1	. .	PUSHBUTTON:LIGHT GRAY,+/;	01963	028-6712
	366-1712-52			1	. .	PUSHBUTTON:DARK GRAY,1/	01963	028-6674
	366-1712-53			1	. .	PUSHBUTTON:DARK GRAY,-/RUB,OUT	01963	028-6887
	366-1712-54			1	. .	PUSHBUTTON:LIGHT GRAY,4	01963	028-6726
	366-1712-55			1	. .	PUSHBUTTON:LIGHT GRAY,5	01963	028-3615
	366-1712-56			1	. .	PUSHBUTTON:LIGHT GRAY,6	01963	028-6727
	366-1712-57			1	. .	PUSHBUTTON:DARK GRAY,*	01963	028-6890
-17	366-1712-58			1	. .	PUSHBUTTON:DARK GRAY,TTY/LOCK	01963	028-6888
	366-1712-59			1	. .	PUSHBUTTON:DARK GRAY,SHIFT	01963	028-0717
	366-1712-60			1	. .	PUSHBUTTON:LIGHT GRAY,Z	01963	028-6713
	366-1712-61			1	. .	PUSHBUTTON:LIGHT GRAY,X	01963	028-6714
	366-1712-62			1	. .	PUSHBUTTON:LIGHT GRAY,C	01963	028-6715
	366-1712-63			1	. .	PUSHBUTTON:LIGHT GRAY,V	01963	028-6716
	366-1712-64			1	. .	PUSHBUTTON:LIGHT GRAY,B	01963	028-6717
	366-1712-65			1	. .	PUSHBUTTON:LIGHT GRAY,N	01963	028-6718
	366-1712-66			1	. .	PUSHBUTTON:LIGHT GRAY,M	01963	028-6719
	366-1712-67			1	. .	PUSHBUTTON:LIGHT GRAY /,	01963	028-6720
	366-1712-68			1	. .	PUSHBUTTON:LIGHT GRAY, /.	01963	028-6721
	366-1712-69			1	. .	PUSHBUTTON:LIGHT GRAY,?/	01963	028-6722
	366-1712-70			1	. .	PUSHBUTTON:DARK GRAY,SHIFT	01963	028-0717
	366-1712-71			1	. .	PUSHBUTTON:GOLD,BREAK	01963	028-6732
	366-1712-72			1	. .	PUSHBUTTON:LIGHT GRAY,1	01963	028-6728
	366-1712-73			1	. .	PUSHBUTTON:LIGHT GRAY,2	01963	028-6729
	366-1712-74			1	. .	PUSHBUTTON:LIGHT GRAY,3	01963	028-6730
	366-1712-75			1	. .	PUSHBUTTON:DARK GRAY,-	01963	028-6678
	366-1712-76			1	. .	PUSHBUTTON:LIGHT GRAY,0	01963	028-0136
	366-1712-77			1	. .	PUSHBUTTON:LIGHT GRAY,.	01963	028-6731
	366-1712-78			1	. .	PUSHBUTTON:DARK GRAY,+	01963	028-6679
-18	260-1393-01			2	. .	SWITCH,PUSH:SPST,NO,KYBD SW,HIGH ACTG F	04713	M51-0101
-19	----- -----			1	. .	SWITCH,PUSH:	01963	M61-0800
-20	----- -----			75	. .	SWITCH,PUSH:	01963	M61-0120
	260-1393-00			1	. .	SWITCH,PUSH:SPST,NO KEYBOARD SWITCH	01963	M61-0100
-21	----- -----			1	. .	SWITCH,PUSH:SPACE BAR	01963	M51-0106
-22	334-2634-00			1		MARKER,IDENT:MARKED 4051	80009	334-2634-00
	333-2068-01			1		PANEL,FRONT:DISPLAY	80009	333-2068-01
-23	200-1874-00			1	.	BEZEL,TAPE CRTG:GRAY PLASTIC	80009	200-1874-00
-24	200-1875-00			5	.	BEZEL,DSPL LT:GRAY PLASTIC	80009	200-1875-00
	343-0588-00			2	.	RETAINER,PANEL:	80009	343-0588-00
-25	333-2068-00			1	.	PANEL,FRONT:DISPLAY	80009	333-2068-00
-26	358-0561-00			1		BUSHING,SLEEVE:1.15 ID X 2.0L,SI,1.2 OD	80009	358-0561-00
-27	----- -----			1		ELECTRON TUBE:(SEE V1 EPL)		
-28	354-0316-00			1	.	MOUNT,RESILIENT:CRT	80009	354-0316-00

Fig. & Index No.	Tektronix Part No.	Serial/Model No. Eff	Dscont	Qty	1 2 3 4 5	Name & Description	Mfr Code	Mfr Part Number
2-	119-0708-00			1		DRIVE,MAG TAPE:	80009	119-0708-00
						(ATTACHING PARTS)		
-1	211-0534-00			2		SCR,ASSEM,WSHR:6-32 X 0.312 INCH,PNH STL	83385	OBD
-2	211-0551-00			3		SCREW,MACHINE:6-32 X 0.562 INCH,PNH STL	83385	OBD
-3	210-0006-00			3		WASHER,LOCK:INTL,0.146 IDX 0.288 OD,STL	78189	1206-00-00-0541C
						- - - * - - -		
	----- -----			-		. MAG TAPE DRIVE ASSEMBLY INCLUDES:		
-4	----- -----			1		. CKT BOARD ASSY:TAPE DRIVE(SEE A6 EPL)		
						(ATTACHING PARTS)		
-5	211-0507-00			8		. SCREW,MACHINE:6-32 X 0.312 INCH,PNH STL	83385	OBD
						- - - * - - -		
	----- -----			-		. . CKT BOARD ASSEMBLY INCLUDES:		
-6	131-0608-00			60		. . CONTACT,ELEC:0.365 INCH LONG	22526	47357
-7	131-0589-00			12		. . CONTACT,ELEC:0.46 INCH LONG	22526	47350
-8	136-0220-00			1		. . SOCKET,PLUG-IN:3 PIN,SQUARE	71785	133-23-11-034
	136-0237-00			2		. . SOCKET,PLUG-IN:8 CONTACT,ROUND	71785	133-98-12-062
-9	136-0514-00			3		. . SOCKET,PLUG IN:MICROCIRCUIT,8 CONTACT	73803	C9308-02
-10	129-0539-00			7		. POST,ELEC-MECH:6-32 THD EXT/INT,1.250 L	80009	129-0539-00
-11	129-0295-00			1		. SPACER,POST:0.250 HEX X 0.894 INCH L,AL	80009	129-0295-00
-12	210-0055-00			8		. WASHER,LOCK:SPLIT,0.145 ID X 0.253 OD,STL	83385	OBD
-13	366-1629-01			1		. PUSH BUTTON:GRAY,EJECT	80009	366-1629-01
-14	214-2316-00			1		. LVR,CRTG EJECT:4.875 L,ALUMINUM	80009	214-2316-00
						(ATTACHING PARTS)		
-15	213-0054-00			1		. SCR,TPG,THD FOR:6-32 X 0.312 INCH,PNH STL	83385	OBD
						- - - * - - -		
-16	351-0455-00			1		. GUIDE,LEVER:EJECT	80009	351-0455-00
						(ATTACHING PARTS)		
-17	211-0012-00			2		. SCREW,MACHINE:4-40 X 0.375 INCH,PNH STL	83385	OBD
-18	210-0586-00			2		. NUT,PLAIN,EXT W:4-40 X 0.25 INCH,STL	78189	OBD
						- - - * - - -		
-19	391-0139-00			2		. BLOCK,GUIDE:CARTRIDGE EJEC	80009	391-0139-00
						(ATTACHING PARTS FOR EACH)		
-20	211-0513-00			1		. SCREW,MACHINE:6-32 X 0.625 INCH,PNH STL	83385	OBD
	211-0514-00			1		. SCREW,MACHINE:6-32 X 0.750 INCH,PNH STL	83385	OBD
						- - - * - - -		
-22	381-0365-00			2		. BAR,CRTG EJECT:2.625 L,DELRIN	80009	381-0365-00
-22	407-1697-00			1		. BRACKET,ANGLE:TAPE DECK	80009	407-1697-00
						(ATTACHING PARTS)		
-23	211-0510-00			1		. SCREW,MACHINE:6-32 X 0.375 INCH,PNH STL	83385	OBD
	211-0513-00			1		. SCREW,MACHINE:6-32 X 0.625 INCH,PNH STL	83385	OBD
						- - - * - - -		
-24	391-0144-00			1		. BLOCK,SUPPORT:HEAD ALIGNMENT	80009	391-0144-00
						(ATTACHING PARTS)		
-25	211-0093-00			2		. SCR,CAP,SOC HD:4-40 X 0.75 INCH L,STL	74445	OBD
-26	211-0564-00			2		. SCREW,CAP,SCH:6-32 X 0.375"L HEX	80009	211-0564-00
						- - - * - - -		
-27	386-3554-00			1		. PLATE,PROT:HEAD ALIGNMENT	80009	386-3554-00
						(ATTACHING PARTS)		
-28	211-0164-00			1		. SCREW,CAP,SCH:4-40 X 0.625 INCH,L STL	83385	OBD
	211-0093-00			1		. SCR,CAP,SOC HD:4-40 X 0.75 INCH L,STL	74445	OBD
						- - - * - - -		
-29	214-2430-00			1		. SPRING,HLCPS:0.375 OD X 1.5 L,OPEN ENDS	000AE	C36C
						(ATTACHING PARTS)		
-30	211-0248-00			1		. SCREW,CAP,SCH:4-40 X 1.25 FLH,82 DEG,STL	000AH	OBD
						- - - * - - -		
	214-2419-00			1		. PIN,SPRING:0.5 L X 0.188 OD,AL	80009	214-2419-00
-31	386-2823-00			1		. PLATE,HEAD MTG:	80009	386-2823-00
						(ATTACHING PARTS)		
-32	211-0206-00			2		. SCR,CAP,SOC HD:2-56 X 0.312 INCH,STL	000AH	OBD
						- - - * - - -		
	119-0421-03			1		. HEAD,SPR:	80009	119-0421-03
-33	352-0161-08			1		. . CONN BODY,PL,EL:3 WIRE GRAY	80009	352-0161-08
	352-0161-09			1		. . CONN BODY,PL,EL:3 WIRE WHITE	80009	352-0161-09

Fig. & Index No.	Tektronix Part No.	Serial/Model No. Eff	Dscont	Qty	1 2 3 4 5 Name & Description	Mfr Code	Mfr Part Number
2-34	131-0707-00			6	. . CONTACT,ELEC:0.48"L,22-26 AWG WIRE	22526	75691-005
-35	119-0421-01			1	. . HEAD,SRR CABLE:	11983	139-077
-36	119-0421-00			1	. HEAD,SRR:	11983	P-DC21P078N5
-37	352-0450-00			1	. HLDR,HEAD ALIGN:ALUMINUM	80009	352-0450-00
-38	----- -----			1	. LOUDSPEAKER,PM:(SEE LS60 EPL)		
					(ATTACHING PARTS)		
-39	211-0507-00			4	. SCREW,MACHINE:6-32 X 0.312 INCH,PNH STL	83385	OBD
					- - - * - - -		
	198-0725-00			1	. WIRE SET,ELEC:MAG TAPE DRIVE	80009	198-0725-00
-40	131-0707-00			20	. . CONTACT,ELEC:0.48"L,22-26 AWG WIRE	22526	75691-005
-41	131-0861-00			2	. . CONTACT,ELEC:QUICK DISCONNECT	00779	42617-2
-42	175-0832-00			FT	. . WIRE,ELECTRICAL:9 WIRE RIBBON,0.729 FT	08261	OBD
-43	175-0863-00			FT	. . WIRE,ELECTRICAL:2 WIRE RIBBON,0.688 FT	80009	175-0863-00
-44	352-0165-00			1	. . CONN BODY,PL,EL:7 WIRE BLACK	80009	352-0165-00
-45	352-0167-07			1	. . CONN BODY,PL,EL:9 WIRE VIOLET	80009	352-0167-07
-46	352-0169-00			1	. . CONN BODY,PL,EL:2 WIRE BLACK	80009	352-0169-00
	352-0169-01			1	. . CONN BODY,PL,EL:2 WIRE BROWN	80009	352-0169-01
-47	214-2319-00			1	. BAR,PIVOT:CARTRIDGE EJECT	80009	214-2319-00
					(ATTACHING PARTS)		
-48	211-0517-00			1	. SCREW,MACHINE:6-32 X 1 INCH,PNH,STL	83385	OBD
-49	210-0457-00			1	. NUT,PLAIN,EXT W:6-32 X 0.312 INCH,STL	83385	OBD
-50	210-1252-00			1	. WASHER,SPR TNSN:0.146 ID X 0.0008 THK		
-51	214-2320-00			1	. PVT,CRTG EJCTR:0.5 DIA,DELRIN	80009	214-2320-00
					- - - * - - -		
	----- -----			-	. . PIVOT BAR INCLUDES:		
-52	214-0489-00			1	. . PIN,SPRING:		
-53	214-1521-00			1	. . PIN,RETAINING:		
-54	337-2260-00			1	. SHIELD:TRAY,SAFETY	80009	337-2260-00
					(ATTACHING PARTS)		
-55	210-0457-00			2	. NUT,PLAIN,EXT W:6-32 X 0.312 INCH,STL	83385	OBD
					- - - * - - -		
-56	352-0424-00			1	. HOLDER,TACH:	80009	352-0424-00
-57	386-3369-01			1	. PLATE,TACH:	80009	386-3369-01
					(ATTACHING PARTS)		
-58	211-0507-00			2	. SCREW,MACHINE:6-32 X 0.312 INCH,PNH STL	83385	OBD
					- - - * - - -		
	----- -----			-	. . PLATE INCLUDES:		
-59	214-1474-00			2	. . PIN,SPRING:0.75 L X 0.125 OD,STL BK OX	80009	214-1474-00
	147-0045-01			1	. MOTOR,DC:6V,1700 RPM	80009	147-0045-01
					(ATTACHING PARTS)		
-60	213-0228-01			1	. SETSCREW:6-32 X 0.125 L,STL		
					- - - * - - -		
	----- -----			-	. . MOTOR INCLUDES:		
-61	352-0169-04			1	. . CONN BODY,PL,EL:2 WIRE YELLOW	80009	352-0169-04
-62	131-0707-00			2	. . CONTACT,ELEC:0.48"L,22-26 AWG WIRE	22526	75691-005
-63	----- -----			1	. . MOTOR,DC:(SEE B1090 EPL)		
	147-0046-01			1	. MOTOR,DC:TAPE DRIVE,12V	80009	147-0046-01
					(ATTACHING PARTS)		
-64	211-0507-00			2	. SCREW,MACHINE:6-32 X 0.312 INCH,PNH STL	83385	OBD
	213-0228-01			1	. SETSCREW:6-32 X 0.125 L,STL		
					- - - * - - -		
	----- -----			-	. . MOTOR INCLUDES:		
-65	352-0161-05			1	. . CONN BODY,PL,EL:3 WIRE GREEN	80009	352-0161-05
-66	131-0707-00			3	. . CONTACT,ELEC:0.48"L,22-26 AWG WIRE	22526	75691-005
-67	----- -----			1	. . MOTOR,DC:(SEE B1092 EPL)		
	----- -----			2	. . CAP.,FXD,CER DI:(SEE C1091,C1092 EPL)		
	210-0202-00			1	. . TERMINAL,LUG:SE #6	78189	2104-06-00-2520N
	213-0124-00			1	. . SCR,TPG,THD FOR:6-20 X 0.250 INCH,PNH STL	83385	OBD
-68	361-0747-00			1	. SPACER,PLATE:0.562 ID X 0.02 THK	80009	361-0747-00
-69	401-0342-01			1	. HUB,TAPE DRIVE:W/0.645 DIA HYPALON WHEEL	80009	401-0342-01
	----- -----			1	. CKT BOARD ASSY:STATUS W/MICRO SW(SEE A7 EPL)		
					(ATTACHING PARTS)		
-70	211-0513-00			2	. SCREW,MACHINE:6-32 X 0.625 INCH,PNH STL	83385	OBD
					- - - * - - -		

Fig. & Index No.	Tektronix Part No.	Serial/Model No. Eff	Dscont	Qty	1 2 3 4 5	Name & Description	Mfr Code	Mfr Part Number
2-	----- -----			-		. . CIRCUIT BOARD ASSEMBLY INCLUDES:		
-71	----- -----			1		. . CKT BOARD ASSY:STATUS W/MICRO SW(SEE A7 EPL)		
						(ATTACHING PARTS)		
-72	211-0601-00			2		. . SCR,ASSEM WSHR:6-32 X 0.312 INCH,PNH BRS	80009	211-0601-00
						- - - * - - -		
	131-0608-00			9		. . CONTACT,ELEC:0.365 INCH LONG	22526	47357
-73	----- -----			2		. . SWITCH,PUSH:(SEE S1,S2 EPL)		
						(ATTACHING PARTS FOR EACH)		
-74	211-0034-00			2		. . SCREW,MACHINE:2-56 X 0.50 INCH,PNH	83385	OBD
-75	210-0405-00			2		. . NUT,PLAIN,HEX.:2-56 X 0.188 INCH,BRS	73743	2X12157-402
-76	210-0001-00			2		. . WASHER,LOCK:INTL,0.092 ID X 0.18"OD,STL	78189	1202-00-00-0541C
						- - - * - - -		
-77	407-1669-00			1		. . BRKT,SENSOR MTG:	80009	407-1669-00
	162-0530-00			FT		. INSUL,SLVG,ELEC:HT SHRINK,0.188 ID,0.33 FT L		
-78	214-2261-00			1		. SPRING,HLCPS:0.035 DIA,5.5 L MUSIC WIRE	80009	214-2261-00
-79	214-2264-00			2		. ARM,DETENT:TAPE POSITIONING	80009	214-2264-00
						(ATTACHING PARTS FOR EACH)		
-80	211-0516-00			1		. SCREW,MACHINE:6-32 X 0.875 INCH,PNH STL	83385	OBD
-81	343-0551-00			1		. RTNR,DETENT ARM:0.14 ID X 0.373 OD,AL	80009	343-0551-00
						- - - * - - -		
-82	401-0349-00			1		. ROLLER,HOLDDOWN:0.50 DIA X 0.75 L,NYLON	80009	401-0349-00
						(ATTACHING PARTS)		
-83	354-0554-00			2		. RING,RETAINING:EXT LUG GRIPPING,0.094 D	79136	G5555-9
						- - - * - - -		
-84	384-1383-00			1		. SHAFT,HOLDDOWN:0.093 DIA X 7.66 L,STL	80009	384-1383-00
						(ATTACHING PARTS)		
-85	354-0350-00			2		. RING,RETAINING:0.073"FREE ID X 0.015",STL	79136	5133-9MD
						- - - * - - -		
-86	351-0451-00			1		. GUIDE,TAPE CRTG:TOP LEFT	80009	351-0451-00
						(ATTACHING PARTS)		
-87	211-0522-00			1		. SCREW,MACHINE:6-32 X 0.625,FLH,STL		
						- - - * - - -		
	351-0462-00			1		. GUIDE,TAPE CRTG:TOP RIGHT	80009	351-0462-00
						(ATTACHING PARTS)		
	211-0522-00			1		. SCREW,MACHINE:6-32 X 0.625,FLH,STL		
						- - - * - - -		
-88	214-2263-00			2		. WHEEL,DETENT:0.187 ID X 0.6 OD,SST	80009	214-2263-00
-89	351-0459-00			1		. GUIDE,TAPE CRTG:ENTRACE	80009	351-0459-00
						(ATTACHING PARTS)		
-90	211-0545-00			2		. SCREW,MACHINE:6-32 X 1.250 INCH,TRH STL	83385	OBD
						- - - * - - -		
-91	351-0454-00			1		. GUIDE,TAPE CRTG:LEFT	80009	351-0454-00
	351-0453-00			1		. GUIDE,TAPE CRTG:RIGHT	80009	351-0453-00
-92	361-0781-00			2		. SPACER,PAD:W/4-40 THD	80009	361-0781-00
						(ATTACHING PARTS FOR EACH)		
-93	210-0407-00			1		. NUT,PLAIN,HEX.:6-32 X 0.25 INCH,BRS	73743	3038-0228-402
	210-0006-00			1		. WASHER,LOCK:INTL,0.146 IDX 0.288 OD,STL	78189	1206-00-00-0541C
						- - - * - - -		
-94	386-3368-00			1		. PLATE,TAPE DECK:	80009	386-3368-00
-95	200-1852-00			1		COVER,PWR,SPLY:	80009	200-1852-00
						(ATTACHING PARTS)		
-96	211-0008-00			3		SCREW,MACHINE:4-40 X 0.25 INCH,PNH STL	83385	OBD
						- - - * - - -		
	620-0246-00			1		POWER SUPPLY:	80009	620-0246-00
						(ATTACHING PARTS)		
-97	212-0004-00			7		SCREW,MACHINE:8-32 X 0.312 INCH,PNH STL	83385	OBD
-98	210-0008-00			3		WASHER,LOCK:INTL,0.172 ID X 0.331"OD,STL	78189	1208-00-00-0541C
						- - - * - - -		
	----- -----			-		. POWER SUPPLY INCLUDES:		
-99	----- -----			3		. TRANSISTOR:(SEE Q251,Q451,Q452 EPL)		
						(ATTACHING PARTS FOR EACH)		
-100	211-0097-00			1		. SCREW,MACHINE:4-40 X 0.312 INCH,PNH STL	83385	OBD
-101	210-1171-00			1		. WSHR,SHOULDERED:0.116 ID X 0.138 INCH OD	52905	A7148516P2
						- - - * - - -		

Fig. & Index No.	Tektronix Part No.	Serial/Model No. Eff	Dscont	Qty	1 2 3 4 5	Name & Description	Mfr Code	Mfr Part Number
2-102	----- -----			1		. TRANSISTOR:(SEE Q252 EPL)		
						(ATTACHING PARTS)		
-103	211-0097-00			1		. SCREW,MACHINE:4-40 X 0.312 INCH,PNH STL	83385	OBD
-104	210-1171-00			1		. WSHR,SHOULDERED:0.116 ID X 0.138 INCH OD	52905	A7148516P2
						- - - * - - -		
-105	----- -----			1		. MICROCIRCUIT:(SEE U352 EPL)		
						(ATTACHING PARTS)		
-106	211-0097-00			1		. SCREW,MACHINE:4-40 X 0.312 INCH,PNH STL	83385	OBD
-107	210-1171-00			1		. WSHR,SHOULDERED:0.116 ID X 0.138 INCH OD	52905	A7148516P2
						- - - * - - -		
-108	----- -----			1		. TRANSISTOR:(SEE Q552 EPL)		
						(ATTACHING PARTS)		
-109	211-0097-00			1		. SCREW,MACHINE:4-40 X 0.312 INCH,PNH STL	83385	OBD
-110	210-1171-00			1		. WSHR,SHOULDERED:0.116 ID X 0.138 INCH OD	52905	A7148516P2
						- - - * - - -		
-111	342-0203-00			6		. INSULATOR,PLATE:XSTR,0.675 X 0.625 X 0.001	80009	342-0203-00
-112	----- -----			1		. CKT BOARD ASSY:POWER SUPPLY(SEE A1 EPL)		
						(ATTACHING PARTS)		
-113	211-0097-00			4		. SCREW,MACHINE:4-40 X 0.312 INCH,PNH STL	83385	OBD
						- - - * - - -		
	----- -----			-		. . CKT BOARD ASSEMBLY INCLUDES:		
-114	131-0589-00			27		. . CONTACT,ELEC:0.46 INCH LONG	22526	47350
-115	344-0154-00			4		. . CLIP,ELECTRICAL:FOR 0.25 INCH DIA FUSE	80009	344-0154-00
-116	334-2151-00			1		. . MARKER,IDENT:		
-117	432-0048-04			4		. . BASE,CAP.,MTG:	80009	432-0048-04
						(ATTACHING PARTS FOR EACH)		
-118	211-0514-00			2		. . SCREW,MACHINE:6-32 X 0.750 INCH,PNH STL	83385	OBD
-119	210-0407-00			2		. . NUT,PLAIN,HEX.:6-32 X 0.25 INCH,BRS	73743	3038-0228-402
-120	386-0254-00			2		. . RET.,CAPACITOR:	25941	85109
						- - - * - - -		
-121	348-0149-00			1		. GROMMET,PLASTIC:U-SHAPED,0.990 INCH LONG	80009	348-0149-00
-122	348-0056-00			1		. GROMMET,PLASTIC:0.375 INCH DIA	80009	348-0056-00
-123	210-0202-00			2		. TERMINAL,LUG:SE #6	78189	2104-06-00-2520N
						(ATTACHING PARTS FOR EACH)		
-124	211-0590-00			1		. SCREW,MACHINE:6-32 X 0.25 INCH,PNH STL	83385	OBD
-135	210-0457-00			1		. NUT,PLAIN,EXT W:6-32 X 0.312 INCH,STL	83385	OBD
						- - - * - - -		
-126	----- -----			1		. SEMICOND DEVICE:(SEE CR1005 EPL)		
						(ATTACHING PARTS)		
-127	211-0097-00			2		. SCREW,MACHINE:4-40 X 0.312 INCH,PNH STL	83385	OBD
						- - - * - - -		
-128	----- -----			1		. FILTER,RAD INTE:(SEE FL1000 EPL)		
						(ATTACHING PARTS)		
-129	211-0025-00			2		. SCREW,MACHINE:4-40 X 0.375 100 DEG,FLH STL	83385	OBD
-130	210-0586-00			2		. NUT,PLAIN,EXT W:4-40 X 0.25 INCH,STL	78189	OBD
						- - - * - - -		
-131	352-0362-00			1		. FUSEHOLDER: W/MOUNTING HARDWARE	75915	345001
-132	210-0873-00			1		. WASHER,NONMETAL:0.5 ID X 0.688 INCH OD,NPRN	70485	OBD
-133	----- -----			1		. XFMR,PWR,SDN/SU:(SEE T1001 EPL)		
						(ATTACHING PARTS)		
-134	212-0515-00			4		. SCREW,MACHINE:10-32 X 2.250" HEX.HD STL	83385	OBD
-135	220-0410-00			4		. NUT,EXTENDED WA:10-32 X 0.375 INCH,STL	83385	OBD
-136	210-0812-00			4		. WASHER,NONMETAL:#10,FIBER	86445	OBD
-137	166-0227-00			4		. INS SLV,ELEC:0.187 ID X 1.50 INCH LONG	80009	166-0227-00
	----- -----			-		. . XFMR INCLUDES:		
	210-0314-00			10		. . TERMINAL,LUG:0.062 X 0.125 HOLE,BRS		
						- - - * - - -		
-138	214-2301-00			1		. HEAT SINK,XFMR:	80009	214-2301-00
-139	380-0452-00			1		. HSG,PWR SUPPLY:	80009	380-0452-00
	131-1864-00			2		. LINK,TERM.CONNE:2.22 AWG,3.75	80009	131-1864-00
	----- -----			-		. . EACH JUMPER INCLUDES:		
-140	131-1041-00			2		. . CONTACT,ELEC:QUICK DISCONNECT	00779	61060-2

Fig. & Index No.	Tektronix Part No.	Serial/Model No. Eff	Dscont	Qty	1 2 3 4 5 Name & Description	Mfr Code	Mfr Part Number
2-141	175-0578-01			FT	. . WIRE,ELECTRICAL:0.375 INCHES LONG	80009	175-0578-01
	198-2498-00			1	. WIRE SET,ELEC:POWER SUPPLY	80009	198-2498-00
-142	131-0947-00			1	. . CONNECTOR BODY,:MALE,4 CONTACT	27264	03-09-1041
	131-0948-00			6	. . CONTACT,ELEC:0.865 INCH L,FEMALE,BRS	27264	02-09-1103
-143	131-1041-00			4	. . CONTACT,ELEC:QUICK DISCONNECT	00779	61060-2
-144	204-0669-00			1	. . CONN BODY,RCPT:2 POS NYLON,SNAP-MT	09922	B6053766
-145	337-2265-00			1	SHIELD,ELEC:CIRCUIT CARD	80009	337-2265-00
					(ATTACHING PARTS)		
-146	211-0008-00			2	SCREW,MACHINE:4-40 X 0.25 INCH,PNH STL	83385	OBD
					- - - * - - -		
-147	337-2251-00			1	SHIELD,ELEC:HIGH VOLTAGE POWER SUPPLY	80009	337-2251-00
					(ATTACHING PARTS)		
-148	211-0008-00			4	SCREW,MACHINE:4-40 X 0.25 INCH,PNH STL	83385	OBD
-149	210-0004-00			1	WASHER,LOCK:INTL,0.12 ID X 0.26"OD,STL	78189	1204-00-00-0541C
					- - - * - - -		
	----- -----			-	. SHIELD INCLUDES:		
-150	252-0571-00			IN	. RUB.SPL SHAPED:CHANNEL,2.0 FT LONG	77969	1353
-151	129-0588-00			1	POST,ELEC-MECH:1.4 L,W/4-40 THD,NYLON	80009	129-0588-00
	----- -----			1	CKT BOARD ASSY:HARD COPY DISPLAY(SEE A4 EPL)		
					(ATTACHING PARTS)		
	211-0008-00			5	SCREW,MACHINE:4-40 X 0.25 INCH,PNH STL	83385	OBD
-152	211-0040-00			2	SCREW,MACHINE:4-40 X 0.25",BDGH PLSTC	26365	OBD
					- - - * - - -		
	----- -----			-	. CKT BOARD ASSEMBLY INCLUDES:		
-153	200-1327-00			1	. SHIELD,RESISTOR:	80009	200-1327-00
-154	366-0261-00			1	. KNOB:0.312 OD X 0.406 INCH LONG	80009	366-0261-00
-155	384-1181-00			1	. EXTENSION SHAFT:1.840 INCH LONG	80009	384-1181-00
-156	376-0029-00			1	. CPLG,SHAFT,RGD:0.128 ID X 0.312 OD X 0.5"L	80009	376-0029-00
	213-0075-00			2	. . . SETSCREW:4-40 X 0.094 INCH,HEX SOC STL	70276	OBD
-157	----- -----			1	. CKT BOARD ASSY:DISPLAY		
-158	129-0369-00			1	. . INSULATOR,STDF:1.370 INCH,W/4-40 THREAD	80009	129-0369-00
					(ATTACHING PARTS)		
-159	211-0040-00			1	. . SCREW,MACHINE:4-40 X 0.25",BDGH PLSTC	26365	OBD
					- - - * - - -		
	131-0993-00[1]			1	. . LINK,TERM. CONNE:2 WIRE BLACK	00779	530153-2
-160	131-0589-00			60	. . CONTACT,ELEC:0.46 INCH LONG	22526	47350
-161	131-1834-00			2	. . TERMINAL,STUD:0.89 L,W/NYLON INSULATOR	98291	023-3000-00-0479
	136-0647-00			1	. . SOCKET ASSY:CRT	80009	136-0647-00
-162	136-0278-00			1	. . . SOCKET,PLUG-IN:WITH PINS	80009	136-0278-00
-163	214-0464-00			7	. . . . CONTACT,ELEC:CRT	80009	214-0464-00
-164	384-0616-00			1	. . POST,ELEC-MECH:HEX,0.25 X 1.370 INCH LONG	80009	384-0616-00
					(ATTACHING PARTS)		
-165	211-0008-00			1	. . SCREW,MACHINE:4-40 X 0.25 INCH,PNH STL	83385	OBD
-166	210-0004-00			1	. . WASHER,LOCK:INTL,0.12 ID X 0.26"OD,STL	78189	1204-00-00-0541C
					- - - * - - -		
-167	210-0201-00			1	. . TERMINAL,LUG:SE #4	78189	2104-04-00-2520N
					(ATTACHING PARTS)		
-168	213-0088-00			1	. . SCR,TPG,THD CTG:4-24 X 0.25 INCH,PNH STL	83385	OBD
	213-0138-00[1]			1	. . SCR,TPG,THD CTG:4-24 X 0.25 INCH,PNH STL	83385	OBD
					- - - * - - -		
-169	----- -----			1	. . TRANSISTOR:(SEE Q432 EPL)		
					(ATTACHING PARTS)		
-170	211-0514-00			2	. . SCREW,MACHINE:6-32 X 0.750 INCH,PNH STL	83385	OBD
-171	210-0561-00			4	. . NUT,PLAIN,HEX.:0.188 INCH L,0.188 HEX BRS	80009	210-0561-00
-172	210-0935-00			2	. . WASHER,NONMETAL:FIBER,0.14 IDX 0.375"OD	74921	OBD
					- - - * - - -		
-173	386-0978-00			1	. . INSULATOR,PLATE:0.002 INCH MICA,FOR TO-3	80009	386-0978-00
-174	214-1713-01			1	. . HEAT SINK,XSTR:	80009	214-1713-01
-175	352-0134-00			1	. . HOLDER,COIL:TOROIDAL,0.472 X 0.417 INCH	80009	352-0134-00
-176	214-0506-00			1	. . CONTACT,ELEC:0.045 SQ X 0.375 INCH L	80009	214-0506-00
-177	214-1292-00			1	. . HEAT SINK,ELEC:TRANSISTOR	05820	205-AB
-178	348-0055-00			1	. . GROMMET,PLASTIC:0.25 INCH DIA	80009	348-0055-00
-179	337-2267-00			1	. . SHIELD,ELEC:HV TRANSFORMER	80009	337-2267-00
-180	361-0137-00			1	. . POST,ELEC-MECH:1.345 INCH,W/4-40 THREAD	80009	361-0137-00
					(ATTACHING PARTS)		
-181	211-0040-00			1	. . SCREW,MACHINE:4-40 X 0.25",BDGH PLSTC	26365	OBD
					- - - * - - -		

[1]On -05 and up only.

Fig. & Index No.	Tektronix Part No.	Serial/Model No. Eff	Dscont	Qty	1 2 3 4 5	Name & Description	Mfr Code	Mfr Part Number
2-	198-3024-00			1		. . WIRE SET,ELEC:DISPLAY	80009	198-3024-00
	198-3079-00			1		. WIRE SET,ELEC:HARD COPY DISPLAY	80009	198-3079-00
-182	131-1790-00			12		. . CONTACT,ELEC:18-24 AWG,FEMALE,BRASS	27264	08-56-0105
-183	204-0671-00			4		. . BODY,CONN,PLUG,:3 FEMALE POSN. NYLON	27264	09-50-4031
-184	175-0862-00			FT		. . WIRE,ELECTRICAL:3 WIRE RIBBON	80009	175-0862-00
-185	131-1815-00			15		. . CONTACT,ELEC:22-30 AWG,FEMALE,BRASS	27264	08-56-0110
-186	204-0678-00			5		. . CONN BODY,PL,EL:FOR 3 FEMALE CONTACTS	27264	10-17-2032
	175-0826-00			FT		. . WIRE,ELECTRICAL:3 WIRE RIBBON	80009	175-0826-00
						- - - * - - -		
-187	----- -----			2		TRANSISTOR:(SEE Q1091,1092 EPL)		
						(ATTACHING PARTS FOR EACH)		
-188	211-0012-00			1		SCREW,MACHINE:4-40 X 0.375 INCH,PNH STL	83385	OBD
-189	210-1171-00			1		WSHR,SHOULDERED:0.116 ID X 0.138 INCH OD	52905	A7148516P2
						- - - * - - -		
-190	----- -----			5		TRANSISTOR:(SEE Q1044,1048,1059,1067,1038 EPL)		
						(ATTACHING PARTS FOR EACH)		
-191	211-0012-00			1		SCREW,MACHINE:4-40 X 0.375 INCH,PNH STL	83385	OBD
-192	210-1171-00			1		WSHR,SHOULDERED:0.116 ID X 0.138 INCH OD	52905	A7148516P2
						- - - * - - -		
-193	----- -----			4		TRANSISTOR:(SEE Q1069,1074,1084,1096 EPL)		
						(ATTACHING PARTS FOR EACH)		
-194	211-0507-00			1		SCREW,MACHINE:6-32 X 0.312 INCH,PNH STL	83385	OBD
						- - - * - - -		
-195	342-0311-00			2		INSULATOR,PLATE:MICA,TO-3 PLSTC TRANSISTOR	01295	10-21-023-105
-196	342-0203-00			8		INSULATOR,PLATE:XSTR,0.675 X 0.625 X 0.001	80009	342-0203-00
	342-0328-00			1		INSULATOR,PLATE:XSTR,ALUMINUM	80009	342-0328-00
-197	348-0115-01			1		GROMMET,PLASTIC:U-SHAPED	80009	348-0115-01
-198	255-0334-00			1		PLASTIC CHANNEL:	11897	122-37-2500
-199	129-0212-00			2		SPACER,POST:0.312 OD X 0.435 INCH L,NYL	80009	129-0212-00
						(ATTACHING PARTS FOR EACH)		
-200	211-0008-00			1		SCREW,MACHINE:4-40 X 0.25 INCH,PNH STL	83385	OBD
						- - - * - - -		
-201	343-0089-00			4		CLAMP,LOOP:LARGE	80009	343-0089-00
-202	366-0261-00			1		KNOB:0.312 OD X 0.406 INCH LONG	80009	366-0261-00
-203	----- -----			1		RES.,VAR,NONWW:(SEE R339 EPL)		
						(ATTACHING PARTS)		
-204	213-0020-00			1		SETSCREW:6-32 X 0.125 INCH,HEX.SOC STL	70276	OBD
						- - - * - - -		
	179-2354-00			1		WIRING HARNESS,:DISPLAY	80009	179-2354-00
						(ATTACHING PARTS)		
-205	131-0890-00			4		LOCK,CONNECTOR:4-40 X 0.312 L	71468	D 20418-2
-206	210-0204-00			2		TERMINAL,LUG:0.146 INCH DIA DE,45 DEG BEND	78189	2157-06-01-2520N
-207	210-0004-00			6		WASHER,LOCK:INTL,0.12 ID X 0.26"OD,STL	78189	1204-00-00-0541C
						- - - * - - -		
	----- -----			-		. CABLE ASSY INCLUDES:		
-208	131-0458-00			1		. CONNECTOR,RCPT,:15 PIN,FEMALE	71468	DA15S
-209	131-0621-00			31		. CONTACT,ELEC:0.577"L,22-26 AWG WIRE	22526	46233
	131-0622-00			5		. CONTACT,ELEC:0.577"L,28-32 AWG WIRE	22526	46241
	131-0707-00			22		. CONTACT,ELEC:0.48"L,22-26 AWG WIRE	22526	75691-005
	131-0708-00			3		. CONTACT,ELEC:0.48"L,28-32 AWG WIRE	22526	47437
	131-0792-00			4		. CONTACT,ELEC:0.577"L,18-20 AWG WIRE	22526	46221
-210	131-1006-00			1		. CONN,RCPT,ELEC:9 CONTACT,FEMALE	71785	230-09-11-101
-211	352-0161-03			1		. CONN BODY,PL,EL:3 WIRE ORANGE	80009	352-0161-03
	352-0161-06			1		. CONN BODY,PL,EL:3 WIRE BLUE	80009	352-0161-06
-212	352-0197-00			1		. CONN BODY,PL,EL:1 WIRE BLACK	80009	352-0197-00
-213	352-0200-00			1		. CONN BODY,PL,EL:4 WIRE BLACK	80009	352-0200-00
	352-0200-05			1		. CONN BODY,PL,EL:4 WIRE GREEN	80009	352-0200-05
	352-0200-06			1		. CONN BODY,PL,EL:4 WIRE BLUE	80009	352-0200-06
-214	352-0203-03			1		. CONN BODY,PL,EL:7 WIRE ORANGE	80009	352-0203-03
-215	352-0204-03			1		. CONN BODY,PL,EL:8 WIRE ORANGE	80009	352-0204-03
	352-0204-04			1		. CONN BODY,PL,EL:8 WIRE YELLOW	80009	352-0204-04

Fig. & Index No.	Tektronix Part No.	Serial/Model No. Eff	Dscont	Qty	1 2 3 4 5	Name & Description	Mfr Code	Mfr Part Number
2-216	352-0205-02			1		. CONN BODY,PL,EL:9 WIRE RED	80009	352-0205-02
	352-0205-04			1		. CONN BODY,PL,EL:9 WIRE YELLOW	80009	352-0205-04
-217	352-0428-00			1		. CONN BODY,PLUG:2/12 FEM CONT	22526	65043-070
-218	343-0549-00			20		. STRAP,TIEDOWN:0.091 W X 3.62 INCH LONG	59730	TY23M
	346-0128-00			1		. STRAP,TIE DOWN:0.1W X 8.0" LONG,NYLON	59730	TY-232M
-219	441-1291-00			1		CHAS,ELEC EQPT:LEFT	80009	441-1291-00
						(ATTACHING PARTS)		
-220	211-0534-00			4		SCR,ASSEM,WSHR:6-32 X 0.312 INCH,PNH STL	83385	OBD
	211-0507-00			1		SCREW,MACHINE:6-32 X 0.312 INCH,PNH STL	83385	OBD

- - - * - - -

Fig. & Index No.	Tektronix Part No.	Serial/Model No. Eff	Dscont	Qty	1 2 3 4 5	Name & Description	Mfr Code	Mfr Part Number
3-1	407-0997-00			2		BRACKET,ANGLE:IMP SHIELD RET,9 INCH LONG	80009	407-0997-00
						(ATTACHING PARTS FOR EACH)		
-2	211-0008-00			2		SCREW,MACHINE:4-40 X 0.25 INCH,PNH STL	83385	OBD
						- - - * - - -		
	----- -----			-		. EACH BRACKET ANGLE INCLUDES:		
-3	253-0056-00			FT		. CUSHION:POLYURATHANE FOAM,PRESSURE SENS	04963	4116
-4	337-1482-00			1		SHLD,IMPLOSION:	80009	337-1482-00
-5	426-0834-01			1		FR,IMPLOSION SH:	80009	426-0834-01
						(ATTACHING PARTS)		
-6	212-0553-00			4		SCREW,MACHINE:10-32 X 1.50 INCH,PNH STL	83385	OBD
-7	361-0541-00			4		SPACER,SLEEVE:0.50 OD X 0.976 INCH LONG	80009	361-0541-00
						- - - * - - -		
	----- -----			-		. FRAME INCLUDES:		
-8	131-1385-00			4		. CONTACT,ELEC:GROUNDING	80009	131-1385-00
	210-0632-00			8		. EYELET,METALLIC:0.089 OD X 0.125"LONG,BRS	01881	3168
-9	378-0064-00			1		FILTER,LIGHT:6.276 X 1.0,0.06 R ACRYLIC	52675	OBD
						(ATTACHING PARTS)		
-10	211-0017-00			2		SCREW,MACHINE:4-40 X 0.375 INCH,PNH STL	83385	OBD
						- - - * - - -		
-11	----- -----			1		CKT BOARD ASSY:INDICATOR(SEE A8 EPL)		
-12	131-0608-00			8		. CONTACT,ELEC:0.365 INCH LONG	22526	47357
-13	337-2235-00			2		. SHIELD,LIGHT:CKT CD MT,1.0X 0.355 INCH	80009	337-2235-00
-14	361-0751-00			2		. SPACER,SLEEVE:0.156 ID X 0.312 OD X 0.493 L	80009	361-0751-00
-15	343-0298-00			1		CLAMP,LOOP:PLASTIC,W/ADHESIVE BACK	95937	HPC25
-16	386-3367-00			1		SUPPORT,CRT:FRONT	80009	386-3367-00
						(ATTACHING PARTS)		
-17	212-0004-00			2		SCREW,MACHINE:8-32 X 0.312 INCH,PNH STL	83385	OBD
-18	210-0008-00			2		WASHER,LOCK:INTL,0.172 ID X 0.331"OD,STL	78189	1208-00-00-0541C
-19	211-0097-00			2		SCREW,MACHINE:4-40 X 0.312 INCH,PNH STL	83385	OBD
						- - - * - - -		
	----- -----			-		. SUPPORT INCLUDES:		
-20	129-0569-00			2		. POST,ELEC-MECH:0.543 L,W/4-40 THD,AL	80009	129-0569-00
-21	343-0006-00			1		CLAMP,LOOP:0.50 INCH DIAMETER,PLSTC	95987	1-2-6B
						(ATTACHING PARTS)		
-22	211-0014-00			1		SCREW,MACHINE:4-40 X 0.50 INCH,PNH STL	83385	OBD
-23	210-0994-00			1		WASHER,FLAT:0.125 ID X 0.25" OD,STL	83385	OBD
-24	210-0863-00			1		WSHR,LOOP CLAMP:FOR 0.50" WIDE CLAMP,STL	95987	C191
						- - - * - - -		
-25	334-1379-00			1		LABEL:CRT,ADHESIVE BACK	80009	334-1379-00
-26	386-3420-00			1		STIFFENER,CHAS:	80009	386-3420-00
						(ATTACHING PARTS)		
-27	211-0097-00			1		SCREW,MACHINE:4-40 X 0.312 INCH,PNH STL	83385	OBD
						- - - * - - -		
-28	348-0013-00			4		FOOT,CABINET:BLACK RUBBER	70485	1561
-29	358-0561-00			1		BUSHING,SLEEVE:1.15 ID X 2.0L,SI,1.2 OD	80009	358-0561-00
-30	337-1519-00			1		SHLD,ELCTRN TUB:FRONT	80009	337-1519-00
						(ATTACHING PARTS)		
-31	211-0590-00			4		SCREW,MACHINE:6-32 X 0.25 INCH,PNH STL	83385	OBD
						- - - * - - -		
-32	337-2263-00			1		SHLD,ELECTRON T:REAR	80009	337-2263-00
						(ATTACHING PARTS)		
-33	210-0458-00			2		NUT,PLAIN,EXT W:8-32 X 0.344 INCH,STL	83385	OBD
						- - - * - - -		
-34	407-1749-00			1		BRACKET,YOKE:	80009	407-1749-00
						(ATTACHING PARTS)		
-35	211-0581-00			2		SCREW,MACHINE:6-32 X 0.375 INCH,TRH STL	83385	OBD
-36	210-0006-00			2		WASHER,LOCK:INTL,0.146 IDX 0.288 OD,STL	78189	1206-00-00-0541C
						- - - * - - -		
-37	----- -----			1		COIL TUBE PEFL:(SEE L1012 A AND B EPL)		
-38	348-0115-01			1		GROMMET,PLASTIC:U-SHAPED	80009	348-0115-01
-39	343-0089-00			2		CLAMP,LOOP:LARGE	80009	343-0089-00
-40	343-0213-00			2		CLAMP,LOOP:PRESS MT,PLASTIC	80009	343-0213-00

Fig. & Index No.	Tektronix Part No.	Serial/Model No. Eff	Dscont	Qty	1 2 3 4 5	Name & Description	Mfr Code	Mfr Part Number
3-41	386-3349-00			1		SUPPORT,CRT:CENTER	80009	386-3349-00
						(ATTACHING PARTS)		
-42	212-0004-00			2		SCREW,MACHINE:8-32 X 0.312 INCH,PNH STL	83385	OBD
-43	210-0008-00			2		WASHER,LOCK:INTL,0.172 ID X 0.331"OD,STL	78189	1208-00-00-0541C
						- - - * - - -		
-44	----- -----			1		FAN,VENTILATING:(SEE B1001 EPL)		
						(ATTACHING PARTS)		
-45	211-0551-00			4		SCREW,MACHINE:6-32 X 0.562 INCH,PNH STL	83385	OBD
						- - - * - - -		
-46	380-0332-00			1		HOUSING,SWITCH:	80009	380-0332-00
						(ATTACHING PARTS)		
-47	211-0507-00			4		SCREW,MACHINE:6-32 X 0.312 INCH,PNH STL	83385	OBD
-48	385-0080-00			4		POST,ELEC-MECH:	80009	385-0080-00
-49	210-0803-00			4		WASHER,FLAT:0.15 ID X 0.375 INCH OD,STL	12327	OBD
						- - - * - - -		
-50	378-0047-00			1		FILTER ELEM,AIR:5.5 X 6.125 INCH	80009	378-0047-00
-51	378-0076-00			1		FILTER,MESH:4.5 SQ,AL	80009	378-0076-00
-52	407-1696-00			1		BRACKET,ANGLE:REAR PANEL MOUNTING	80009	407-1696-00
						(ATTACHING PARTS)		
-53	212-0004-00			2		SCREW,MACHINE:8-32 X 0.312 INCH,PNH STL	83385	OBD
	210-0008-00			2		WASHER,LOCK:INTL,0.172 ID X 0.331"OD,STL	78189	1208-00-00-0541C
						- - - * - - -		
-54	366-1522-00			1		KNOB:LINE VOLTAGE INDICATOR	80009	366-1522-00
						(ATTACHING PARTS)		
-55	211-0507-00			1		SCREW,MACHINE:6-32 X 0.312 INCH,PNH STL	83385	OBD
						- - - * - - -		
-56	----- -----			1		CKT BOARD ASSY:MEMORY(SEE A3 EPL)		
-57	211-0514-00			6		. SCREW,MACHINE:6-32 X 0.750 INCH,PNH STL	83385	OBD
-58	131-1780-00			1		. CONN,RCPT,ELEC:RT-ANGLE HDR,2/25 MALE		
						(ATTACHING PARTS)		
-59	211-0185-00			2		. SCREW,MACHINE:2-56 X 0.438",PNH,STL	07111	OBD
-60	210-0405-00			2		. NUT,PLAIN,HEX.:2-56 X 0.188 INCH,BRS	73743	2X12157-402
						- - - * - - -		
-61	136-0621-00			48		. SOCKET,PLUG-IN:22 CONTACT	73803	C932202
-62	361-0562-00			6		. SPACER,SLEEVE:0.156 ID X 0.25 OD X 0.375	80009	361-0562-00
-63	175-1726-00			1		. CA ASSY,SP,ELEC:50-28 AWG,3.0L	80009	175-1726-00
-64	----- -----			1		CKT BOARD ASSY:CPU(SEE A2 EPL)		
						(ATTACHING PARTS)		
-65	211-0507-00			2		SCREW,MACHINE:6-32 X 0.312 INCH,PNH STL	83385	OBD
-66	211-0534-00			2		SCR,ASSEM,WSHR:6-32 X 0.312 INCH,PNH STL	83385	OBD
						- - - * - - -		
	----- -----			-		. CKT BOARD ASSY INCLUDES:		
-67	211-0558-00			3		. SCREW,MACHINE:6-32 X 0.250 BDGH,NYL,SLOT	26365	921-1150-0014
-68	129-0435-00			3		. SPACER,POST:0.733 L X 6-32 THD THRU BRS	80009	129-0435-00
-69	131-0608-00			10		. CONTACT,ELEC:0.365 INCH LONG	22526	47357
-70	131-1465-00			2		. CONNECTOR,RCPT,:34 RT ANGEL CONT	20999	3431-1002
						(ATTACHING PARTS FOR EACH)		
-71	211-0185-00			2		. SCREW,MACHINE:2-56 X 0.438",PNH,STL	07111	OBD
-72	210-0405-00			2		. NUT,PLAIN,HEX.:2-56 X 0.188 INCH,BRS	73743	2X12157-402
						- - - * - - -		
-73	131-1780-00			1		. CONN,RCPT,ELEC:RT-ANGLE HDR,2/25 MALE		
						(ATTACHING PARTS)		
-74	211-0185-00			2		. SCREW,MACHINE:2-56 X 0.438",PNH,STL	07111	OBD
-75	210-0405-00			2		. NUT,PLAIN,HEX.:2-56 X 0.188 INCH,BRS	73743	2X12157-402
						- - - * - - -		
-76	131-1789-00			1		. CONN,RCPT,ELEC:RT-ANGLE,2/10		
						(ATTACHING PARTS)		
-77	211-0185-00			2		. SCREW,MACHINE:2-56 X 0.438",PNH,STL	07111	OBD
-78	210-0405-00			2		. NUT,PLAIN,HEX.:2-56 X 0.188 INCH,BRS	73743	2X12157-402
						- - - * - - -		
-79	136-0514-00			2		. SOCKET,PLUG IN:MICROCIRCUIT,8 CONTACT	73803	C9308-02
-80	136-0578-00			16		. SOCKET,PLUG-IN:24 DIP,LOW PROFILE	01295	C932402
-81	136-0621-00			16		. SOCKET,PLUG-IN:22 CONTACT	73803	C932202

Fig. & Index No.	Tektronix Part No.	Serial/Model No. Eff	Dscont	Qty	1 2 3 4 5	Name & Description	Mfr Code	Mfr Part Number
3-82	136-0623-00			6		. SOCKET,PLUG-IN:40 DIP,LOW PROFILE	73803	C934002
-83	253-0135-00			IN		. PLASTIC STRIP:PRESS,SENS,ADH CTD BS	12624	V592-1/2
-84	386-3370-01			1		. PLATE,CONN MTG:REAR,W/HARDWARE	80009	386-3370-01
-85	386-3371-00			1		. SUPPORT,CKT CD:C.P.U. RIGHT	80009	386-3371-00
-86	386-3372-00			1		. SUPPORT,CKT CD:C.P.U. LEFT	80009	386-3372-00
-87	129-0563-00			8		. POST,ELEC-MECH:0.701 L,W/6-32 THD THRU,AL	80009	129-0563-00
-88	348-0178-00			4		BUMPER,PLASTIC:2.0 W X 0.40 INCH H	80009	348-0178-00
						(ATTACHING PARTS FOR EACH)		
-89	213-0054-00			2		SCR,TPG,THD FOR:6-32 X 0.312 INCH,PNH STL	83385	OBD
-90	210-0803-00			2		WASHER,FLAT:0.15 ID X 0.375 INCH OD,STL	12327	OBD
						- - - * - - -		
-91	348-0177-00			4		PAD,CABINET FT:1.25 W X 0.50 INCH H	80009	348-0177-00
-92	131-1846-00			1		CONTACT,ELEC:GROUNDING	80009	131-1846-00
						(ATTACHING PARTS)		
-93	213-0088-00			1		SCR,TPG,THD CTG:4-24 X 0.25 INCH,PNH STL	83385	OBD
						- - - * - - -		
	198-2301-00			1		WIRE SET,ELEC:	80009	198-2301-00
						(ATTACHING PARTS)		
-94	213-0088-00			1		SCR,TPG,THD CTG:4-24 X 0.25 INCH,PNH STL	83385	OBD
						- - - * - - -		
	----- -----			-		. WIRE KIT INCLUDES:		
-95	200-1903-00			1		. COVER,ELEC SW:POWER	80009	200-1903-00
-96	260-1775-00			1		. SWITCH,ROCKER:DPST,6A,115VAC	10389	27-900-024
-97	131-0945-00			6		. CONTACT,ELEC:0.865 INCH LONG,MALE,BRS	27264	02-09-2103
-98	131-0946-00			1		. CONNECTOR BODY,:FEMALE,4 CONTACT	27264	03-09-2041
-99	204-0670-00			1		. CONN BODY,PLUG:2 POSN MALE OR FEM,DTT LK,NYL	09922	B6053863
-100	131-1041-00			2		. CONTACT,ELEC:QUICK DISCONNECT	00779	61060-2
-101	426-1253-00			1		FRAME SECT,CAB.:FRONT	80009	426-1253-00
						(ATTACHING PARTS)		
-102	211-0534-00			2		SCR,ASSEM,WSHR:6-32 X 0.312 INCH,PNH STL	83385	OBD
-103	211-0512-00			2		SCREW,MACHINE:6-32 X 0.50" 100 DEG,FLH STL	83385	OBD
						- - - * - - -		
-104	390-0484-01			1		CABINET SIDE:RIGHT	80009	390-0484-01
						(ATTACHING PARTS)		
-105	211-0559-00			3		SCREW,MACHINE:6-32 X 0.375"100 DEG,FLH STL	83385	OBD
-106	210-0006-00			3		WASHER,LOCK:INTL,0.146 IDX 0.288 OD,STL	78189	1206-00-00-0541C
						- - - * - - -		
-107	390-0483-01			1		CABINET SIDE:LEFT	80009	390-0483-01
						(ATTACHING PARTS)		
	211-0559-00			3		SCREW,MACHINE:6-32 X 0.375"100 DEG,FLH STL	83385	OBD
	210-0006-00			3		WASHER,LOCK:INTL,0.146 IDX 0.288 OD,STL	78189	1206-00-00-0541C
						- - - * - - -		
-108	390-0482-00			1		CABINET BOTTOM:CALCULATOR	80009	390-0482-00
-109	179-2355-00			1		WIRING HARNESS,:POWER	80009	179-2355-00
-110	131-0621-00			17		. CONTACT,ELEC:0.577"L,22-26 AWG WIRE	22526	46233
	131-0707-00			53		. CONTACT,ELEC:0.48"L,22-26 AWG WIRE	22526	75691-005
-111	175-0830-00			FT		. WIRE,ELECTRICAL:7 WIRE RIBBON	08261	OBD
-112	175-0831-00			FT		. WIRE,ELECTRICAL:8 WIRE RIBBON	08261	OBD
-113	352-0199-02			1		. CONN BODY,PL,EL:3 WIRE RED	80009	352-0199-02
-114	352-0200-02			1		. CONN BODY,PL EL:4 WIRE RED	80009	352-0200-02
-115	352-0164-00			1		. CONN BODY,PL,EL:6 WIRE BLACK	80009	352-0164-00
-116	352-0165-00			1		. CONN BODY,PL,EL:7 WIRE BLACK	80009	352-0165-00
-117	352-0166-00			1		. CONN BODY,PL,EL:8 WIRE BLACK	80009	352-0166-00
-118	352-0206-01			1		. CONN BODY,PL,EL:10 WIRE BROWN	80009	352-0206-01
-119	352-0429-00			1		. CONN BODY,PLUG:2/19 FEM CONT	22526	65043-071
-120	343-0549-00			9		. STRAP,TIEDOWN:0.091 W X 3.62 INCH LONG	59730	TY23M
	175-1725-00			1		CA ASSY,SP,ELEC:34-28 AWG,14.0 L	80009	175-1725-00
-121	131-0833-01			2		. CONNECTOR,PLUG,:0.750 FT LONG	00779	86987-1
-122	175-1084-00			FT		. WIRE,ELECTRICAL:FLAT TYPE,3 INCHES LONG	75037	3365

FIG. 4 ACCESSORIES

Fig. & Index No.	Tektronix Part No.	Serial/Model No. Eff	Dscont	Qty	1 2 3 4 5	Name & Description	Mfr Code	Mfr Part Number
						STANDARD ACCESSORIES		
	020-0160-00			1		TAPE CARTRIDGE:PLOT 50 SYSTEM SOFTWARE	80009	020-0160-00
	020-0161-00			1		TAPE CARTRIDGE:PLOT 50 SYSTEM SOFTWARE	80009	020-0161-00
	016-0367-00			1		BDR,LOOSE-LEAF:2.0 CAP RING,VINYL COVER	000AC	016-0367-00
	070-1940-00			1		MANUAL,TECH:OPERATORS,4051 GRAPHIC CALCULATOR	80009	070-1940-00
	070-2056-00			1		MANUAL,TECH:INSTR,4051 GRAPHIC SYSTEM REFERENCE	80009	070-2056-00
	070-2058-00			1		MANUAL,TECH:INTRO TO PROGRAMMING IN BASIC	80009	070-2058-00
	070-2059-00			1		MANUAL,TECH:INTRO TO GRPH PROGRAMMING IN BASIC	80009	070-2059-00
	119-0680-01			1		CARTRIDGE,TAPE:MAGNETIC TAPE PKG OF 5	0000P	83-1990-1322-4
	161-0066-00			1		CABLE ASSY,PWR,:3 WIRE,98 INCH LONG	80009	161-0066-00
	334-2630-02			1		OVERLAY,KYBD:BLANK,PACKAGE OF 10	80009	334-2630-02
						OPTION ACCESSORIES		
	070-2065-00			1		MANUAL,TECH:SERVICE,VOL 1	80009	070-2065-00
	070-2286-00			1		MANUAL,TECH:SERVICE,VOL 2	80009	070-2286-00
	012-0630-00			1		CABLE,INTCON:10 FEET LONG	29587	AC3011101
	012-0630-01			1		CABLE,INTCON:2 METERS 4051 TO GPT	29587	AC3011100
	016-0346-01			1		VISOR,CRT:	80009	016-0346-01
	016-0364-00			1		PEDESTAL KIT:	80009	016-0364-00
	016-0376-00			1		COVER,PROT:	52833	016-0376-00
	334-2630-02			1		OVERLAY,KYBD:BLANK,PACKAGE OF 10	80009	334-2630-02

FIG. 1 KEYBOARD & CRT

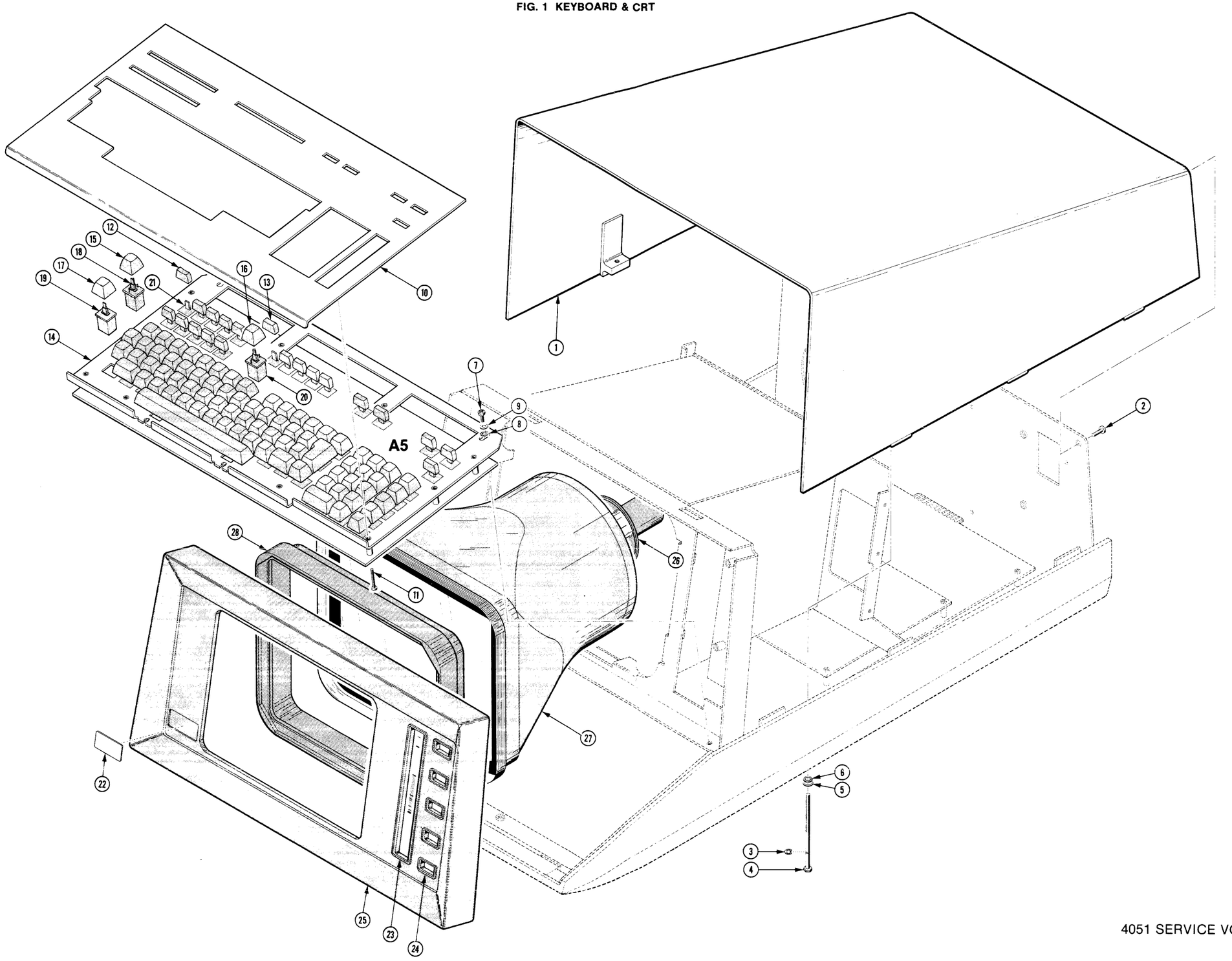

FIG. 2 TAPE DRIVE, POWER & DISPLAY ASSEMBLIES

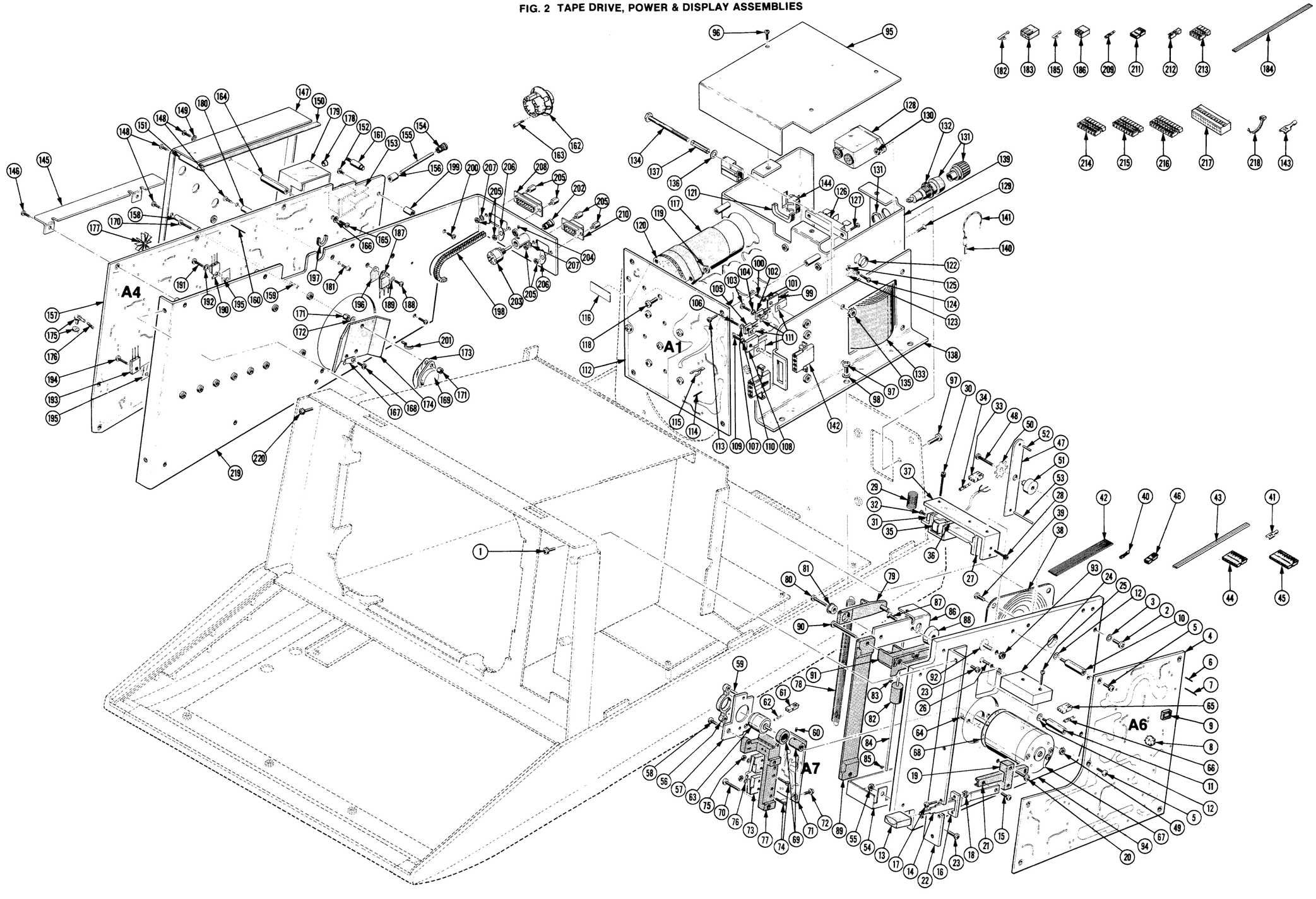

FIG. 3 CIRCUIT BOARDS & CHASSIS

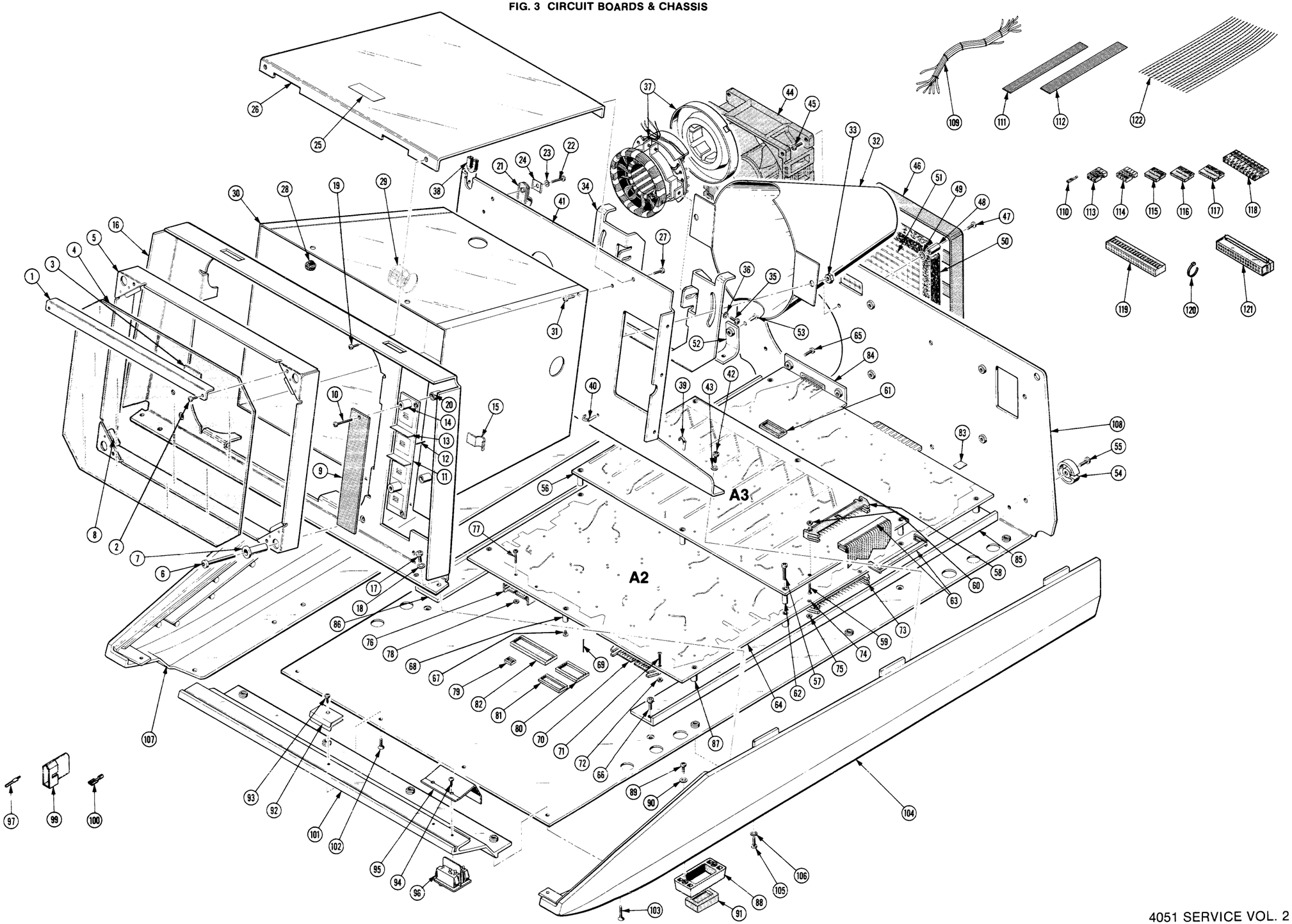

Section 7

FIRMWARE BACKPACK SCHEMATICS

Symbols and Reference Designators

Electrical components shown on the diagrams are in the following units unless noted otherwise:

Capacitors = Values one or greater are in picofarads (pF).
Values less than one are in microfarads (μF).

Resistors = Ohms (Ω).

Graphic symbols and class designation letters are based on ANSI Standard Y32.2-1975.

Logic symbology is based on ANSI Y32.14-1973 in terms of positive logic. Logic symbols depict the logic function performed and may differ from the manufacturer's data.

Abbreviations are based on ANSI Y1.1-1972.
Other ANSI standards that are used in the preparation of diagrams by Tektronix, Inc. are:

Y14.15, 1966	Drafting Practices.
Y14.2, 1973	Line Conventions and Lettering.
Y10.5, 1968	Letter Symbols for Quantities Used in Electrical Science and Electrical Engineering.

The following prefix letters are used as reference designators to identify components or assemblies on the diagrams.

A	Assembly, separable or repairable (circuit board, etc)
AT	Attenuator, fixed or variable
B	Motor
BT	Battery
C	Capacitor, fixed or variable
CB	Circuit breaker
CR	Diode, signal or rectifier
DL	Delay line
DS	Indicating device (lamp)
E	Spark Gap, Ferrite bead
F	Fuse
FL	Filter
H	Heat dissipating device (heat sink, heat radiator, etc)
HR	Heater
HY	Hybrid circuit
J	Connector, stationary portion
K	Relay
L	Inductor, fixed or variable
M	Meter
P	Connector, movable portion
Q	Transistor or silicon-controlled rectifier
R	Resistor, fixed or variable
RT	Thermistor
S	Switch or contactor
T	Transformer
TC	Thermocouple
TP	Test point
U	Assembly, inseparable or non-repairable (integrated circuit, etc.)
V	Electron tube
VR	Voltage regulator (zener diode, etc.)
W	Wirestrap or cable
Y	Crystal
Z	Phase shifter

The following special symbols may appear on the diagrams:

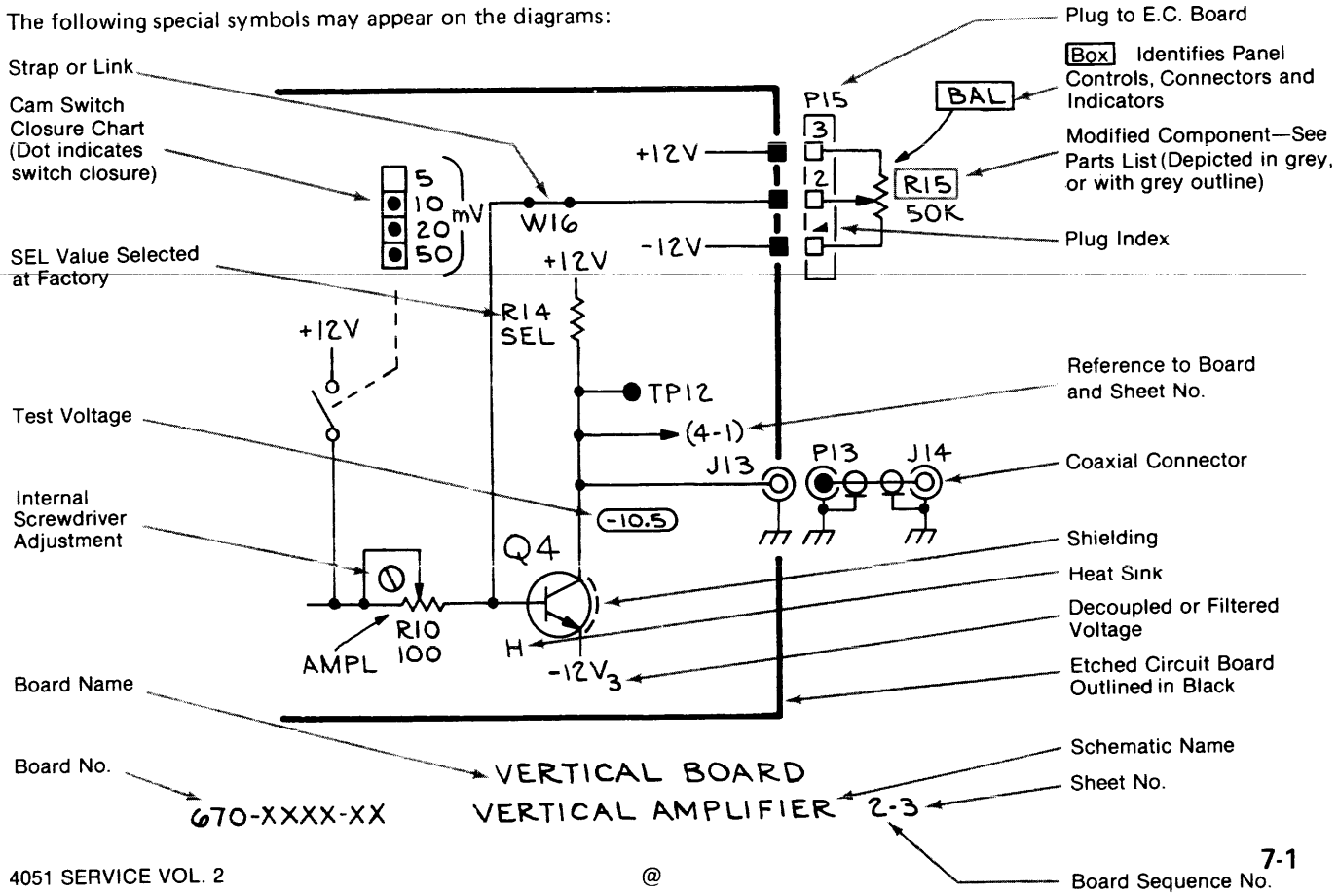

1. TRUE HIGH and TRUE LOW Signals

Signal names on the schematics are followed by −1 or −0. A TRUE HIGH signal is indicated by −1, and a TRUE LOW signal is indicated by −0.

SIGNAL−1 = TRUE HIGH
SIGNAL−0 = TRUE LOW

2. Cross-References

Schematic cross-references (from/to information) are included on the schematics. The "from" reference only indicates the signal "source," and the "to" reference lists all loads where the signal is used. All from/to information will be enclosed in parenthesis.

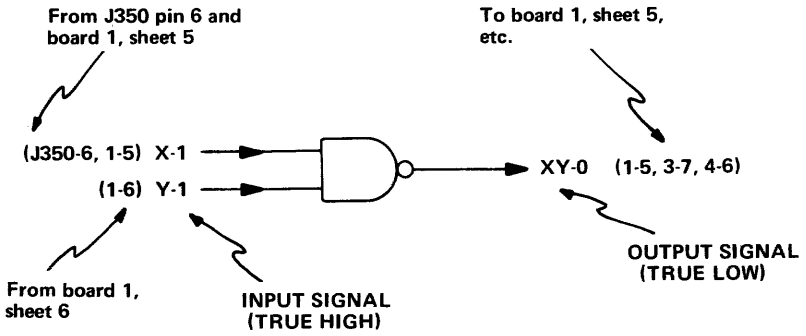

Board #	Name of Board	Schematic Section
1	Power Supply	4051 Schematics
2	CPU	
3	Memory	
4	Display	
5	Keyboard	
6	Tape Drive	
7	Tape Status	
8	Indicator Lights	
9	Firmware Backpack	Firmware Backpack
10	Communication Interface	Communication Backpack
11	Communication ROM	

REPLACEABLE PARTS

PARTS ORDERING INFORMATION

Replacement parts are available from or through your local Tektronix, Inc. Field Office or representative.

Changes to Tektronix instruments are sometimes made to accommodate improved components as they become available, and to give you the benefit of the latest circuit improvements developed in our engineering department. It is therefore important, when ordering parts, to include the following information in your order: Part number, instrument type or number, serial number, and modification number if applicable.

If a part you have ordered has been replaced with a new or improved part, your local Tektronix, Inc. Field Office or representative will contact you concerning any change in part number.

Change information, if any, is located at the rear of this manual.

SPECIAL NOTES AND SYMBOLS

X000	Part first added at this serial number
00X	Part removed after this serial number

FIGURE AND INDEX NUMBERS

Items in this section are referenced by figure and index numbers to the illustrations.

INDENTATION SYSTEM

This mechanical parts list is indented to indicate item relationships. Following is an example of the indentation system used in the description column.

1 2 3 4 5 *Name & Description*

Assembly and/or Component
Attaching parts for Assembly and/or Component
\- - - * - - -
Detail Part of Assembly and/or Component
Attaching parts for Detail Part
\- - - * - - -
* *Parts of Detail Part*
Attaching parts for Parts of Detail Part
\- - - * - - -

Attaching Parts always appear in the same indentation as the item it mounts, while the detail parts are indented to the right. Indented items are part of, and included with, the next higher indentation. The separation symbol - - - * - - - indicates the end of attaching parts.

Attaching parts must be purchased separately, unless otherwise specified.

ITEM NAME

In the Parts List, an Item Name is separated from the description by a colon (:). Because of space limitations, an Item Name may sometimes appear as incomplete. For further Item Name identification, the U.S. Federal Cataloging Handbook H6-1 can be utilized where possible.

ABBREVIATIONS

"	INCH
#	NUMBER SIZE
ACTR	ACTUATOR
ADPTR	ADAPTER
ALIGN	ALIGNMENT
AL	ALUMINUM
ASSEM	ASSEMBLED
ASSY	ASSEMBLY
ATTEN	ATTENUATOR
AWG	AMERICAN WIRE GAGE
BD	BOARD
BRKT	BRACKET
BRS	BRASS
BRZ	BRONZE
BSHG	BUSHING
CAB	CABINET
CAP	CAPACITOR
CER	CERAMIC
CHAS	CHASSIS
CKT	CIRCUIT
COMP	COMPOSITION
CONN	CONNECTOR
COV	COVER
CPLG	COUPLING
CRT	CATHODE RAY TUBE
DEG	DEGREE
DWR	DRAWER
ELCTRN	ELECTRON
ELEC	ELECTRICAL
ELCTLT	ELECTROLYTIC
ELEM	ELEMENT
EPL	ELECTRICAL PARTS LIST
EQPT	EQUIPMENT
EXT	EXTERNAL
FIL	FILLISTER HEAD
FLEX	FLEXIBLE
FLH	FLAT HEAD
FLTR	FILTER
FR	FRAME or FRONT
FSTNR	FASTENER
FT	FOOT
FXD	FIXED
GSKT	GASKET
HDL	HANDLE
HEX	HEXAGON
HEX HD	HEXAGONAL HEAD
HEX SOC	HEXAGONAL SOCKET
HLCPS	HELICAL COMPRESSION
HLEXT	HELICAL EXTENSION
HV	HIGH VOLTAGE
IC	INTEGRATED CIRCUIT
ID	INSIDE DIAMETER
IDENT	IDENTIFICATION
IMPLR	IMPELLER
IN	INCH
INCAND	INCANDESCENT
INSUL	INSULATOR
INTL	INTERNAL
LPHLDR	LAMPHOLDER
MACH	MACHINE
MECH	MECHANICAL
MTG	MOUNTING
NIP	NIPPLE
NON WIRE	NOT WIRE WOUND
OBD	ORDER BY DESCRIPTION
OD	OUTSIDE DIAMETER
OVH	OVAL HEAD
PH BRZ	PHOSPHOR BRONZE
PL	PLAIN or PLATE
PLSTC	PLASTIC
PN	PART NUMBER
PNH	PAN HEAD
PWR	POWER
RCPT	RECEPTACLE
RES	RESISTOR
RGD	RIGID
RLF	RELIEF
RTNR	RETAINER
SCH	SOCKET HEAD
SCOPE	OSCILLOSCOPE
SCR	SCREW
SE	SINGLE END
SECT	SECTION
SEMICOND	SEMICONDUCTOR
SHLD	SHIELD
SHLDR	SHOULDERED
SKT	SOCKET
SL	SLIDE
SLFLKG	SELF-LOCKING
SLVG	SLEEVING
SPR	SPRING
SQ	SQUARE
SST	STAINLESS STEEL
STL	STEEL
SW	SWITCH
T	TUBE
TERM	TERMINAL
THD	THREAD
THK	THICK
TNSN	TENSION
TPG	TAPPING
TRH	TRUSS HEAD
V	VOLTAGE
VAR	VARIABLE
W/	WITH
WSHR	WASHER
XFMR	TRANSFORMER
XSTR	TRANSISTOR

CROSS INDEX—MFR. CODE NUMBER TO MANUFACTURER

Mfr. Code	Manufacturer	Address	City, State, Zip
01121	ALLEN-BRADLEY COMPANY	1201 2ND STREET SOUTH	MILWAUKEE, WI 53204
01295	TEXAS INSTRUMENTS, INC., SEMICONDUCTOR GROUP	P O BOX 5012, 13500 N CENTRAL EXPRESSWAY	DALLAS, TX 75222
04713	MOTOROLA, INC., SEMICONDUCTOR PROD. DIV.	5005 E MCDOWELL RD,PO BOX 20923	PHOENIX, AZ 85036
05574	VIKING INDUSTRIES, INC.	21001 NORDHOFF STREET	CHATSWORTH, CA 91311
56289	SPRAGUE ELECTRIC CO.		NORTH ADAMS, MA 01247
77250	PHEOLL MANUFACTURING CO., DIVISION OF ALLIED PRODUCTS CORP.	5700 W. ROOSEVELT RD.	CHICAGO, IL 60650
80009	TEKTRONIX, INC.	P O BOX 500	BEAVERTON, OR 97077
83385	CENTRAL SCREW CO.	2530 CRESCENT DR.	BROADVIEW, IL 60153
91637	DALE ELECTRONICS, INC.	P. O. BOX 609	COLUMBUS, NE 68601

Electrical

Ckt No.	Tektronix Part No.	Serial/Model No. Eff	Dscont	Name & Description	Mfr Code	Mfr Part Number
A1	670-4325-00	B010151	B030539	CKT BOARD ASSY:FIRMWARE BACK PACK	80009	670-4325-00
A1	670-4325-01	B030540		CKT BOARD ASSY:FIRMWARE BACK PACK	80009	670-4325-01
C101	283-0010-00			CAP.,FXD,CER DI:0.05UF,+100-20%,50V	56289	273C20
C102	283-0010-00			CAP.,FXD,CER DI:0.05UF,+100-20%,50V	56289	273C20
C103	290-0534-00			CAP.,FXD,ELCTLT:1UF,20%,35V	56289	196D105X0035HA1
C201	290-0745-00			CAP.,FXD,ELCTLT:22UF,+50-10%,25V	56289	502D225
C241	283-0010-00			CAP.,FXD,CER DI:0.05UF,+100-20%,50V	56289	273C20
C321	290-0745-00			CAP.,FXD,ELCTLT:22UF,+50-10%,25V	56289	502D225
C322	290-0745-00			CAP.,FXD,ELCTLT:22UF,+50-10%,25V	56289	502D225
C341	283-0010-00			CAP.,FXD,CER DI:0.05UF,+100-20%,50V	56289	273C20
J91	131-1909-00			CONN,RCPT,ELEC:CKT BD,22/44 CONTACT	05574	3VH22/1JN3
J92	131-1909-00			CONN,RCPT,ELEC:CKT BD,22/44 CONTACT	05574	3VH22/1JN3
P5	131-1791-00			CONN,RCPT,ELEC:BOARD EDGE,25/50 CONTACT	05574	3VH25/1JND5
Q321	151-0302-00	B010151	B010202X	TRANSISTOR:SILICON,NPN	04713	2N2222A
R201	321-0184-00			RES.,FXD,FILM:806 OHM,1%,0.125W	91637	MFF1816G806R0F
R202	321-0173-00			RES.,FXD,FILM:619 OHM,1%,0.125W	91637	MFF1816G619R0F
R221	315-0472-00			RES.,FXD,CMPSN:4.7K OHM,5%,0.25W	01121	CB4725
R321	315-0103-00	B010151	B010202X	RES.,FXD,CMPSN:10K OHM,5%,0.25W	01121	CB1035
U101	156-0747-00	B010151	B030539	MICROCIRCUIT,DI:16K ROM,CUSTOM MASK	80009	156-0747-00
U101	156-0747-01	B030540		MICROCIRCUIT,DI:16K ROM,CUSTOM MASK	80009	156-0747-01
U201	156-0748-00	B010151	B030539	MICROCIRCUIT,DI:16K ROM,CUSTOM MASK	80009	156-0748-00
U201	156-0748-01	B030540		MICROCIRCUIT,DI:16K ROM,CUSTOM MASK	80009	156-0748-01
U221	156-0392-00			MICROCIRCUIT,DI:QUAD LATCH	01295	SN74LS175N
U241	156-0469-00			MICROCIRCUIT,DI:3-LINE TO 8-LINE DECODER	01295	SN74LS138N
U321	156-0469-00			MICROCIRCUIT,DI:3-LINE TO 8-LINE DECODER	01295	SN74LS138N
U341	156-0469-00			MICROCIRCUIT,DI:3-LINE TO 8-LINE DECODER	01295	SN74LS138N
U441	156-0382-00	XB010203		MICROCIRCUIT,DI:QUAD 2-INPUT NAND GATE	01295	SN74LS00N

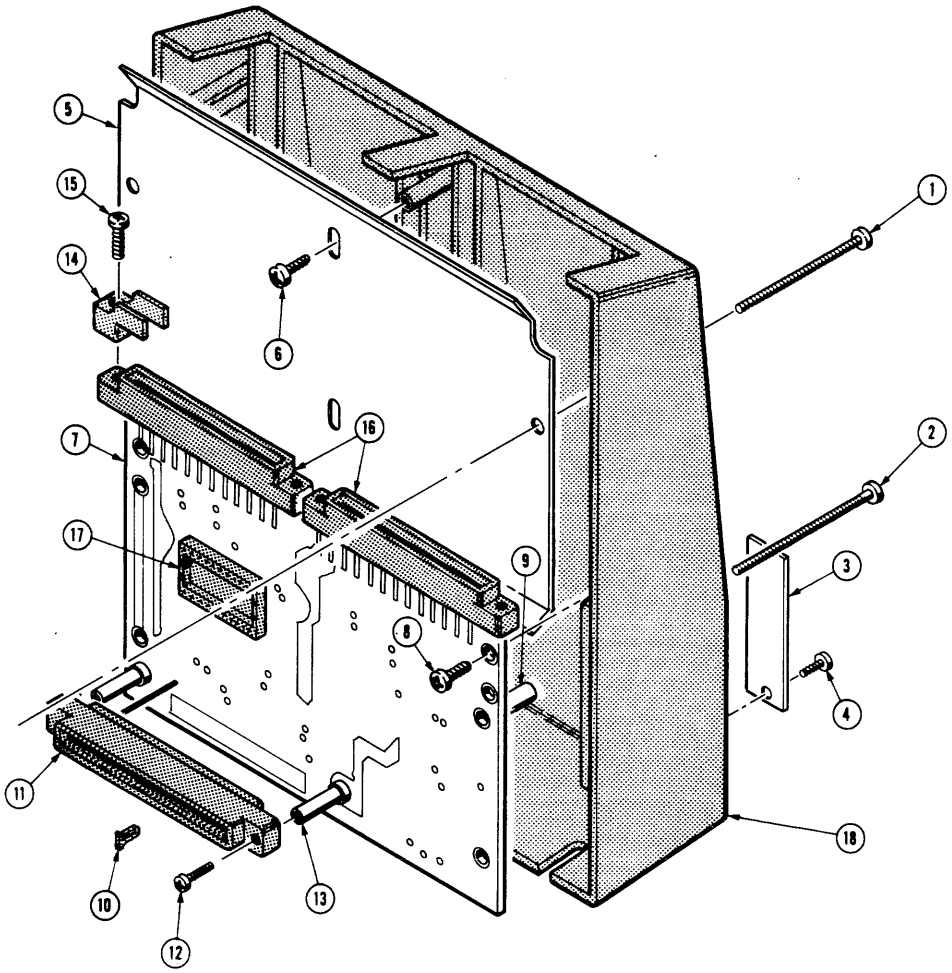

Mechanical

Fig. & Index No.	Tektronix Part No.	Serial/Model No. Eff	Dscont	Qty	1 2 3 4 5	Name & Description	Mfr Code	Mfr Part Number
	020-0147-00			1		ACCESSORY PKG:OPTIONAL FIRMWARE BACKPACK	80009	020-0147-00
						(ATTACHING PARTS)		
-1	211-0530-00			2		SCREW,MACHINE:6-32 X 1.75 INCH,PNH STL	83385	OBD
-2	211-0623-00			2		SCREW,MACHINE:6-32 X 2.25 INCHES,PNH,STL	83385	OBD
						- - - * - - -		
	----- -----			-		. BACKPACK ASSY INCLUDES:		
-3	200-1887-00			1		. COVER,FIRMWARE:	80009	200-1887-00
						(ATTACHING PARTS)		
-4	211-0008-00			2		. SCREW,MACHINE:4-40 X 0.25 INCH,PNH STL	83385	OBD
						- - - * - - -		

Fig. & Index No.	Tektronix Part No.	Serial/Model No. Eff	Dscont	Qty	1 2 3 4 5	Name & Description	Mfr Code	Mfr Part Number
-5	200-1851-00			1		. COVER,ROM PACK:	80009	200-1851-00
						(ATTACHING PARTS)		
-6	213-0054-00			2		. SCR,TPG,THD FOR:6-32 X 0.312 INCH,PNH STL	83385	OBD
						- - - * - - -		
-7	----- -----			1		. CKT BOARD ASSY:FIRMWARE BACK PACK(SEE A1 EPL)		
						(ATTACHING PARTS)		
-8	213-0054-00			3		. SCR,TPG,THD FOR:6-32 X 0.312 INCH,PNH STL	83385	OBD
						- - - * - - -		
	----- -----			-		. . CKT BOARD ASSY INCLUDES:		
-9	129-0561-00			2		. . SPACER,POST:0.535 L,W-4-40 INTL ONE END	80009	129-0561-00
-10	214-1458-00			1		. . KEY,CONN PLZN:	05574	091-0071-00
-11	131-1791-00			1		. . CONN,RCPT,ELEC:CKT BD,25/50 CONTACT	05574	3VH25/1JND5
						(ATTACHING PARTS)		
-12	211-0198-00			2		. . SCREW,MACHINE:4-40 X 0.438 PNH,STL,POZ	77250	OBD
						- - - * - - -		
-13	129-0248-00			2		. . SPACER,POST:0.663 INCH LONG,BRS	80009	129-0248-00
-14	351-0500-00			4		. . GUIDE,CKT CARD:	80009	351-0500-00
						(ATTACHING PARTS FOR EACH)		
-15	211-0198-00			1		. . SCREW,MACHINE:4-40 X 0.438 PNH,STL,POZ	77250	OBD
						- - - * - - -		
-16	131-1909-00			2		. . CONN,RCPT,ELEC:CKT BD,22/44 CONT	05574	3 VH 22/1JN3
-17	136-0578-00			2		. . SOCKET,PLUG-IN:24 DIP,LOW PROFILE	01295	C932402
-18	351-0452-00			1		. GUIDE,ROM PACK:	80009	351-0452-00

Section 9
COMMUNICATION BACKPACK SCHEMATICS

Symbols and Reference Designators

Electrical components shown on the diagrams are in the following units unless noted otherwise:

Capacitors = Values one or greater are in picofarads (pF).
Values less than one are in microfarads (μF).
Resistors = Ohms (Ω).

Graphic symbols and class designation letters are based on ANSI Standard Y32.2-1975.

Logic symbology is based on ANSI Y32.14-1973 in terms of positive logic. Logic symbols depict the logic function performed and may differ from the manufacturer's data.

Abbreviations are based on ANSI Y1.1-1972.
Other ANSI standards that are used in the preparation of diagrams by Tektronix, Inc. are:

Y14.15, 1966	Drafting Practices.
Y14.2, 1973	Line Conventions and Lettering.
Y10.5, 1968	Letter Symbols for Quantities Used in Electrical Science and Electrical Engineering.

The following prefix letters are used as reference designators to identify components or assemblies on the diagrams.

A	Assembly, separable or repairable (circuit board, etc)	H	Heat dissipating device (heat sink, heat radiator, etc)	S	Switch or contactor
AT	Attenuator, fixed or variable	HR	Heater	T	Transformer
B	Motor	HY	Hybrid circuit	TC	Thermocouple
BT	Battery	J	Connector, stationary portion	TP	Test point
C	Capacitor, fixed or variable	K	Relay	U	Assembly, inseparable or non-repairable (integrated circuit, etc.)
CB	Circuit breaker	L	Inductor, fixed or variable	V	Electron tube
CR	Diode, signal or rectifier	M	Meter	VR	Voltage regulator (zener diode, etc.)
DL	Delay line	P	Connector, movable portion	W	Wirestrap or cable
DS	Indicating device (lamp)	Q	Transistor or silicon-controlled rectifier	Y	Crystal
E	Spark Gap, Ferrite bead			Z	Phase shifter
F	Fuse	R	Resistor, fixed or variable		
FL	Filter	RT	Thermistor		

The following special symbols may appear on the diagrams:

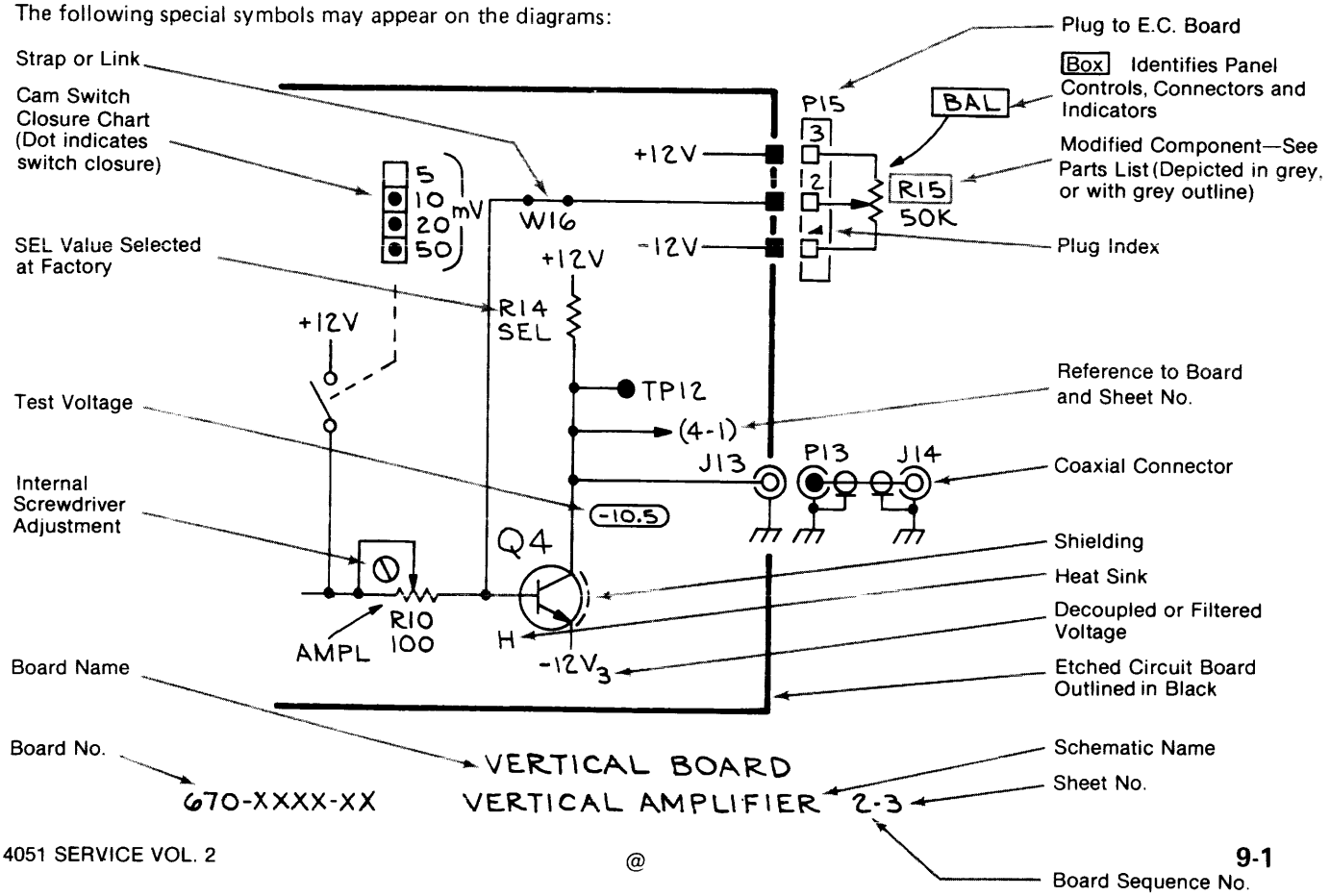

1. TRUE HIGH and TRUE LOW Signals

Signal names on the schematics are followed by −1 or −0. A TRUE HIGH signal is indicated by −1, and a TRUE LOW signal is indicated by −0.

SIGNAL−1 = TRUE HIGH
SIGNAL−0 = TRUE LOW

2. Cross-References

Schematic cross-references (from/to information) are included on the schematics. The "from" reference only indicates the signal "source," and the "to" reference lists all loads where the signal is used. All from/to information will be enclosed in parenthesis.

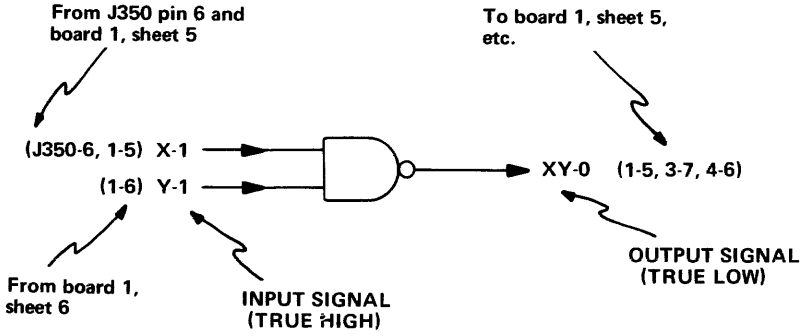

Board #	Name of Board	Schematic Section
1	Power Supply	4051 Schematics
2	CPU	
3	Memory	
4	Display	
5	Keyboard	
6	Tape Drive	
7	Tape Status	
8	Indicator Lights	
9	Firmware Backpack	Firmware Backpack
10	Communication Interface	Communication Backpack
11	Communication ROM	

REPLACEABLE PARTS

PARTS ORDERING INFORMATION

Replacement parts are available from or through your local Tektronix, Inc. Field Office or representative.

Changes to Tektronix instruments are sometimes made to accommodate improved components as they become available, and to give you the benefit of the latest circuit improvements developed in our engineering department. It is therefore important, when ordering parts, to include the following information in your order: Part number, instrument type or number, serial number, and modification number if applicable.

If a part you have ordered has been replaced with a new or improved part, your local Tektronix, Inc. Field Office or representative will contact you concerning any change in part number.

Change information, if any, is located at the rear of this manual.

SPECIAL NOTES AND SYMBOLS

X000	Part first added at this serial number
00X	Part removed after this serial number

FIGURE AND INDEX NUMBERS

Items in this section are referenced by figure and index numbers to the illustrations.

INDENTATION SYSTEM

This mechanical parts list is indented to indicate item relationships. Following is an example of the indentation system used in the description column.

1 2 3 4 5 *Name & Description*

Assembly and/or Component
Attaching parts for Assembly and/or Component
- - - * - - -
Detail Part of Assembly and/or Component
Attaching parts for Detail Part
- - - * - - -
Parts of Detail Part
Attaching parts for Parts of Detail Part
- - - * - - -

Attaching Parts always appear in the same indentation as the item it mounts, while the detail parts are indented to the right. Indented items are part of, and included with, the next higher indentation. The separation symbol - - - * - - - indicates the end of attaching parts.

Attaching parts must be purchased separately, unless otherwise specified.

ITEM NAME

In the Parts List, an Item Name is separated from the description by a colon (:). Because of space limitations, an Item Name may sometimes appear as incomplete. For further Item Name identification, the U.S. Federal Cataloging Handbook H6-1 can be utilized where possible.

ABBREVIATIONS

"	INCH
#	NUMBER SIZE
ACTR	ACTUATOR
ADPTR	ADAPTER
ALIGN	ALIGNMENT
AL	ALUMINUM
ASSEM	ASSEMBLED
ASSY	ASSEMBLY
ATTEN	ATTENUATOR
AWG	AMERICAN WIRE GAGE
BD	BOARD
BRKT	BRACKET
BRS	BRASS
BRZ	BRONZE
BSHG	BUSHING
CAB	CABINET
CAP	CAPACITOR
CER	CERAMIC
CHAS	CHASSIS
CKT	CIRCUIT
COMP	COMPOSITION
CONN	CONNECTOR
COV	COVER
CPLG	COUPLING
CRT	CATHODE RAY TUBE
DEG	DEGREE
DWR	DRAWER
ELCTRN	ELECTRON
ELEC	ELECTRICAL
ELCTLT	ELECTROLYTIC
ELEM	ELEMENT
EPL	ELECTRICAL PARTS LIST
EQPT	EQUIPMENT
EXT	EXTERNAL
FIL	FILLISTER HEAD
FLEX	FLEXIBLE
FLH	FLAT HEAD
FLTR	FILTER
FR	FRAME or FRONT
FSTNR	FASTENER
FT	FOOT
FXD	FIXED
GSKT	GASKET
HDL	HANDLE
HEX	HEXAGON
HEX HD	HEXAGONAL HEAD
HEX SOC	HEXAGONAL SOCKET
HLCPS	HELICAL COMPRESSION
HLEXT	HELICAL EXTENSION
HV	HIGH VOLTAGE
IC	INTEGRATED CIRCUIT
ID	INSIDE DIAMETER
IDENT	IDENTIFICATION
IMPLR	IMPELLER
IN	INCH
INCAND	INCANDESCENT
INSUL	INSULATOR
INTL	INTERNAL
LPHLDR	LAMPHOLDER
MACH	MACHINE
MECH	MECHANICAL
MTG	MOUNTING
NIP	NIPPLE
NON WIRE	NOT WIRE WOUND
OBD	ORDER BY DESCRIPTION
OD	OUTSIDE DIAMETER
OVH	OVAL HEAD
PH BRZ	PHOSPHOR BRONZE
PL	PLAIN or PLATE
PLSTC	PLASTIC
PN	PART NUMBER
PNH	PAN HEAD
PWR	POWER
RCPT	RECEPTACLE
RES	RESISTOR
RGD	RIGID
RLF	RELIEF
RTNR	RETAINER
SCH	SOCKET HEAD
SCOPE	OSCILLOSCOPE
SCR	SCREW
SE	SINGLE END
SECT	SECTION
SEMICOND	SEMICONDUCTOR
SHLD	SHIELD
SHLDR	SHOULDERED
SKT	SOCKET
SL	SLIDE
SLFLKG	SELF-LOCKING
SLVG	SLEEVING
SPR	SPRING
SQ	SQUARE
SST	STAINLESS STEEL
STL	STEEL
SW	SWITCH
T	TUBE
TERM	TERMINAL
THD	THREAD
THK	THICK
TNSN	TENSION
TPG	TAPPING
TRH	TRUSS HEAD
V	VOLTAGE
VAR	VARIABLE
W/	WITH
WSHR	WASHER
XFMR	TRANSFORMER
XSTR	TRANSISTOR

CROSS INDEX—MFR. CODE NUMBER TO MANUFACTURER

Mfr. Code	Manufacturer	Address	City, State, Zip
00779	AMP, INC.	P O BOX 3608	HARRISBURG, PA 17105
01121	ALLEN-BRADLEY COMPANY	1201 2ND STREET SOUTH	MILWAUKEE, WI 53204
01295	TEXAS INSTRUMENTS, INC., SEMICONDUCTOR GROUP	P O BOX 5012, 13500 N CENTRAL EXPRESSWAY	DALLAS, TX 75222
04713	MOTOROLA, INC., SEMICONDUCTOR PROD. DIV.	5005 E MCDOWELL RD,PO BOX 20923	PHOENIX, AZ 85036
05574	VIKING INDUSTRIES, INC.	21001 NORDHOFF STREET	CHATSWORTH, CA 91311
18324	SIGNETICS CORP.	811 E. ARQUES	SUNNYVALE, CA 94086
22526	BERG ELECTRONICS, INC.	YOUK EXPRESSWAY	NEW CUMBERLAND, PA 17070
54492	CINCH COMPANY	6126 MONTECITO BLVD.,PO BOX 167	SANTA ROSA, CA 95402
56289	SPRAGUE ELECTRIC CO.		NORTH ADAMS, MA 01247
71468	ITT CANNON ELECTRIC	666 E. DYER RD.	SANTA ANA, CA 92702
72136	ELECTRO MOTIVE CORPORATION, SUB OF INTERNATIONAL ELECTRONICS CORPORATION	SOUTH PARK AND JOHN STREETS	WILLIMANTIC, CT 06226
72982	ERIE TECHNOLOGICAL PRODUCTS, INC.	644 W. 12TH ST.	ERIE, PA 16512
73138	BECKMAN INSTRUMENTS, INC., HELIPOT DIV.	2500 HARBOR BLVD.	FULLERTON, CA 92634
73743	FISCHER SPECIAL MFG. CO.	446 MORGAN ST.	CINCINNATI, OH 45206
73803	TEXAS INSTRUMENTS, INC., METALLURGICAL MATERIALS DIV.	34 FOREST STREET	ATTLEBORO, MA 02703
75037	MINNESOTA MINING AND MFG. CO., ELECTRO PRODUCTS DIVISION	3M CENTER	ST. PAUL, MN 55101
77250	PHEOLL MANUFACTURING CO., DIVISION OF ALLIED PRODUCTS CORP.	5700 W. ROOSEVELT RD.	CHICAGO, IL 60650
80009	TEKTRONIX, INC.	P O BOX 500	BEAVERTON, OR 97077
83385	CENTRAL SCREW CO.	2530 CRESCENT DR.	BROADVIEW, IL 60153
91637	DALE ELECTRONICS, INC.	P. O. BOX 609	COLUMBUS, NE 68601

Electrical

Ckt No.	Tektronix Part No.	Serial/Model No. Eff	Dscont	Name & Description	Mfr Code	Mfr Part Number
A1	670-4331-00			CKT BOARD ASSY:COMMUNICATION	80009	670-4331-00
A2	670-4332-00			CKT BOARD ASSY:ROM	80009	670-4332-00
	----- -----	XB010119	B019999X	CKT BOARD ASSY:DAUGHTER		
A1	670-4331-00			CKT BOARD ASSY:COMMUNICATION	80009	670-4331-00
C5	283-0010-00			CAP.,FXD,CER DI:0.05UF,+100-20%,50V	56289	273C20
C25	283-0010-00			CAP.,FXD,CER DI:0.05UF,+100-20%,50V	56289	273C20
C105	283-0010-00			CAP.,FXD,CER DI:0.05UF,+100-20%,50V	56289	273C20
C110	290-0745-00			CAP.,FXD,ELCTLT:22UF,+50-10%,25V	56289	502D225
C111	290-0745-00			CAP.,FXD,ELCTLT:22UF,+50-10%,25V	56289	502D225
C112	290-0745-00			CAP.,FXD,ELCTLT:22UF,+50-10%,25V	56289	502D225
C115	283-0010-00			CAP.,FXD,CER DI:0.05UF,+100-20%,50V	56289	273C20
C125	283-0010-00			CAP.,FXD,CER DI:0.05UF,+100-20%,50V	56289	273C20
C225	283-0080-00			CAP.,FXD,CER DI:0.022UF,+80-20%,25V	56289	19C611
C226	283-0687-00			CAP.,FXD,MICA D:560PF,2%,300V	72136	DM15E561G0300
C245	283-0010-00			CAP.,FXD,CER DI:0.05UF,+100-20%,50V	56289	273C20
J91	131-1909-00			CONN,RCPT,ELEC:CKT BD,22/44 CONTACT	05574	3VH22/1JN3
J92	131-1909-00			CONN,RCPT,ELEC:CKT BD,22/44 CONTACT	05574	3VH22/1JN3
J93	131-1437-00			CONN,RCPT,ELEC:25 FEMALE CONTACT	54492	DB-25-S-F179
P5	131-1791-00			CONN,RCPT,ELEC:BOARD EDGE,25/50 CONTACT	05574	3VH2511JND5
R35	315-0472-00			RES.,FXD,CMPSN:4.7K OHM,5%,0.25W	01121	CB4725
R110	315-0821-00			RES.,FXD,CMPSN:820 OHM,5%,0.25W	01121	CB8215
R125	315-0222-00			RES.,FXD,CMPSN:2.2K OHM,5%,0.25W	01121	CB2225
R135	315-0472-00			RES.,FXD,CMPSN:4.7K OHM,5%,0.25W	01121	CB4725
R225	315-0472-00			RES.,FXD,CMPSN:4.7K OHM,5%,0.25W	01121	CB4725
R226	321-0320-00			RES.,FXD,FILM:21K OHM,1%,0.125W	91637	MFF1816G21001F
R228	321-0311-00			RES.,FXD,FILM:16.9K OHM,1%,0.125W	91637	MFF1816G16901F
R229	321-0373-00			RES.,FXD,FILM:75K OHM, 1%,0.125W	91637	MFF1816G75001F
R235	315-0101-00			RES.,FXD,CMPSN:100 OHM,5%,0.25W	01121	CB1015
R255	311-1238-00			RES.,VAR,NONWIR:5K OHM,10%,0.50W	73138	72X-27-0.502K
U5	156-0427-00			MICROCIRCUIT,DI:PERIPHERAL INTERFACE ADPTR	80009	156-0427-00
U25	156-0658-00			MICROCIRCUIT,DI:ASYNCHRONOUS COMM INT ADPT	04713	MC6850L
U35	156-0383-00			MICROCIRCUIT,DI:QUAD 2-INPUT NOR GATE	01295	SN74LS02N
U105	156-0469-00			MICROCIRCUIT,DI:3-LINE TO 8-LINE DECODER	01295	SN74LS138N
U115	156-0469-00			MICROCIRCUIT,DI:3-LINE TO 8-LINE DECODER	01295	SN74LS138N
U125	156-0741-00			MICROCIRCUIT,DI:4-BIT BINARY COUNTER	80009	156-0741-00
U135	156-0138-00			MICROCIRCUIT,LI:QUAD LINE RECEIVER	01295	SN75154N
U225	156-0402-00			MICROCIRCUIT,DI:TIMER	18324	NE555V
U235	156-0139-00			MICROCIRCUIT,LI:DUAL LINE DRIVER	01295	SN75150P
U245	156-0139-00			MICROCIRCUIT,LI:DUAL LINE DRIVER	01295	SN75150P
VR105	152-0195-00			SEMICOND DEVICE:ZENER,0.4W,5.1V,5%	80009	152-0195-00
A2	670-4332-00			CKT BOARD ASSY:ROM	80009	670-4332-00
C31	290-0745-00			CAP.,FXD,ELCTLT:22UF,+50-10%,25V	56289	502D225
C51	283-0116-00			CAP.,FXD,CER DI:820PF,5%,500V	72982	801-547B821J
C61	283-0116-00			CAP.,FXD,CER DI:820PF,5%,500V	72982	801-547B821J
C63	290-0745-00			CAP.,FXD,ELCTLT:22UF,+50-10%,25V	56289	502D225
C101	283-0010-00			CAP.,FXD,CER DI:0.05UF,+100-20%,50V	56289	273C20
C111	283-0010-00			CAP.,FXD,CER DI:0.05UF,+100-20%,50V	56289	273C20
C121	283-0010-00			CAP.,FXD,CER DI:0.05UF,+100-20%,50V	56289	273C20
C131	290-0534-00			CAP.,FXD,ELCTLT:1UF,20%,35V	56289	196D105X0035HA1
C132	283-0010-00			CAP.,FXD,CER DI:0.05UF,+100-20%,50V	56289	273C20

Ckt No.	Tektronix Part No.	Serial/Model No. Eff	Dscont	Name & Description	Mfr Code	Mfr Part Number
Q31	151-0301-00			TRANSISTOR:SILICON,PNP	04713	2N2907A
Q41	151-0301-00			TRANSISTOR:SILICON,PNP	04713	2N2907A
R31	315-0102-00			RES.,FXD,CMPSN:1K OHM,5%,0.25W	01121	CB1025
R41	315-0102-00			RES.,FXD,CMPSN:1K OHM,5%,0.25W	01121	CB1025
U1	156-0747-01			MICROCIRCUIT,DI:16K ROM,CUSTOM MASK	80009	156-0747-01
U11	156-0748-01			MICROCIRCUIT,DI:16K ROM,CUSTOM MASK	80009	156-0748-01
U21	156-0469-00			MICROCIRCUIT,DI:3-LINE TO 8-LINE DECODER	01295	SN74LS138N
U31	156-0469-00			MICROCIRCUIT,DI:3-LINE TO 8-LINE DECODER	01295	SN74LS138N
U101	156-0712-00	B010100	B019999	MICROCIRCUIT,DI:16K ROM,CUSTOM MASK	80009	156-0712-00
U101	156-0712-01	B020000		MICROCIRCUIT,DI:ROM CUSTOM MASK	80009	156-0712-01
U111	156-0713-00	B010100	B019999	MICROCIRCUIT,DI:16K ROM,CUSTOM MASK	80009	156-0713-00
U111	156-0713-01	B020000		MICROCIRCUIT,DI:ROM CUSTOM MASK	80009	156-0713-01
U121	156-0714-00	B010100	B019999	MICROCIRCUIT,DI:16K ROM,CUSTOM MASK	80009	156-0714-00
U121	156-0714-01	B020000		MICROCIRCUIT,DI:ROM CUSTOM MASK	80009	156-0714-01
U131	156-0715-00	B010100	B019999	MICROCIRCUIT,DI:16K ROM,CUSTOM MASK	80009	156-0715-00
U131	156-0715-01	B020000		MICROCIRCUIT,DI:ROM CUSTOM MASK	80009	156-0715-01
VR31	152-0217-00			SEMICOND DEVICE:ZENER,0.4W,8.2V,5%	80009	152-0217-00
VR41	152-0217-00			SEMICOND DEVICE:ZENER,0.4W,8.2V,5%	80009	152-0217-00
	----- -----	XB010119	B019999X	CKT BOARD ASSY:DAUGHTER		
C1	283-0010-00	XB010119	B019999X	CAP.,FXD,CER DI:0.05UF,+100-20%,50V	56289	273C20
Q21	151-0188-00	XB010119	B019999X	TRANSISTOR:SILICON,PNP	01295	2N3906
R1	315-0330-00	XB010119	B019999X	RES.,FXD,CMPSN:33 OHM,5%,0.25W	01121	CB3305
R11	315-0202-00	XB010119	B019999X	RES.,FXD,CMPSN:2K OHM,5%,0.25W	01121	CB2025
U1	156-0718-00	XB010119	B019999X	MICROCIRCUIT,DI:TRIPLE 3-INP POS-NOR GATES	80009	156-0718-00
U11	156-0718-00	XB010119	B019999X	MICROCIRCUIT,DI:TRIPLE 3-INP POS-NOR GATES	80009	156-0718-00
U21	156-0467-00	XB010119	B019999X	MICROCIRCUIT,DI:QUAD 2-INPUT NAND BUFFER	01295	SN74LS38N
U31	156-0465-00	XB010119	B019999X	MICROCIRCUIT,DI:8-INPUT NAND GATE	01295	SN74LS30N

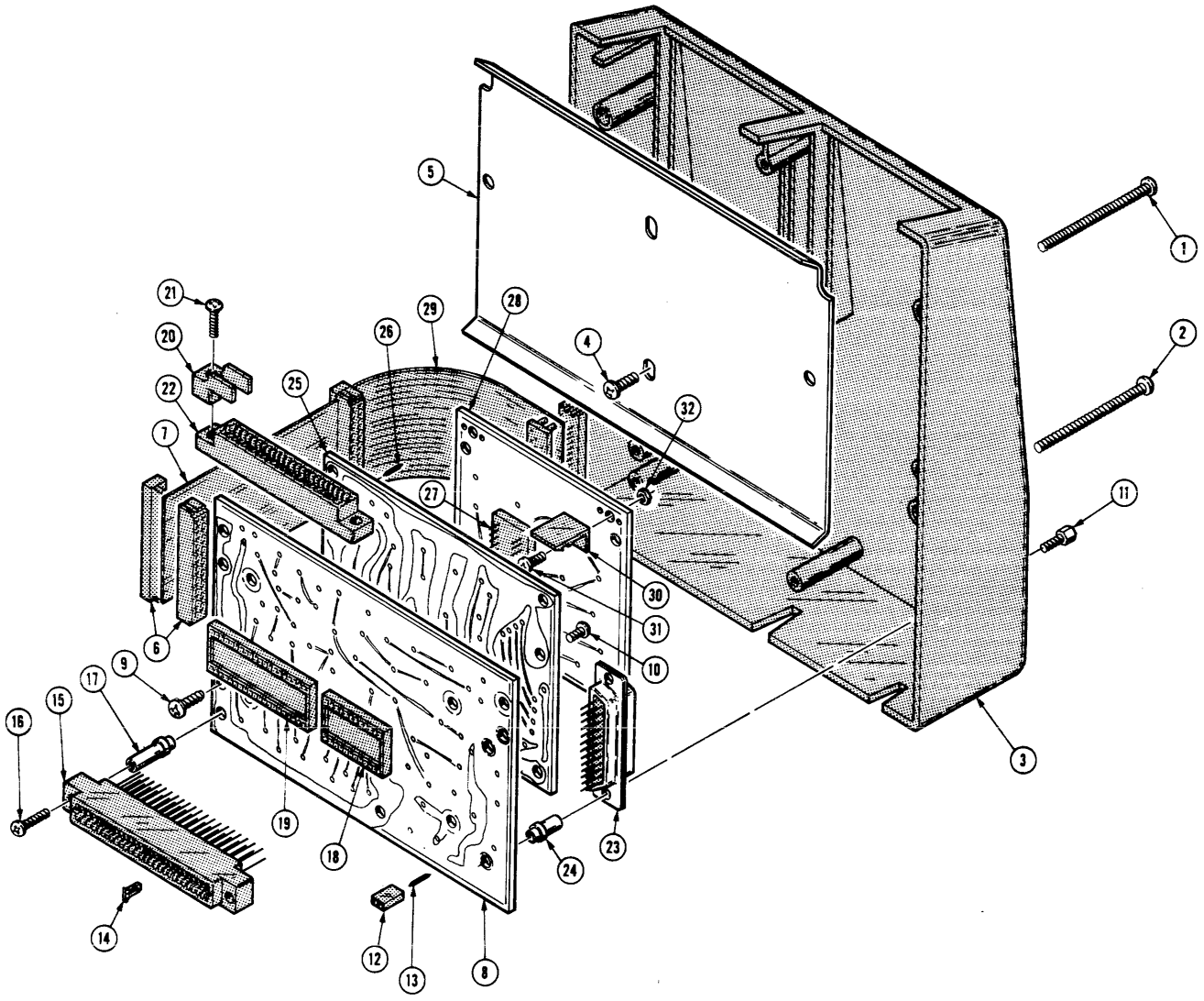

Mechanical

Fig. & Index No.	Tektronix Part No.	Serial/Model No. Eff	Dscont	Qty	1 2 3 4 5	Name & Description	Mfr Code	Mfr Part Number
	021-0188-00			1		INTERFACE:4051 TO RS232	80009	021-0188-00
						(ATTACHING PARTS)		
-1	211-0530-00			2		. SCREW,MACHINE:6-32 X 1.75 INCH,PNH STL	83385	OBD
-2	211-0623-00			2		. SCREW,MACHINE:6-32 X 2.25 INCHES,PNH,STL	83385	OBD
						- - - * - - -		
-3	351-0452-00			1		. GUIDE,ROM PACK:	80009	351-0452-00
						(ATTACHING PARTS)		
-4	213-0054-00			2		. SCR,TPG,THD FOR:6-32 X 0.312 INCH,PNH STL	83385	OBD
						- - - * - - -		
-5	200-1851-01			1		. COVER,ROM PACK:	80009	200-1851-01
	175-1778-00			1		. CA ASSY,SP,ELEC:34/28 AWG,2.5 LONG	80009	175-1778-00
-6	131-0833-00			2		. . CONNECTOR,PLUG,:34 CONTACTS	75037	3414
-7	175-1084-00			FT		. . WIRE,ELECTRICAL:FLAT TYPE,3 INCHES LONG	75037	3365

Fig. & Index No.	Tektronix Part No.	Serial/Model No. Eff	Dscont	Qty	1 2 3 4 5	Name & Description	Mfr Code	Mfr Part Number
-8	----- -----			1		. CKT BOARD ASSY:COMMUNICATION(SEE A1 EPL)		
						(ATTACHING PARTS)		
-9	213-0054-00			3		. SCR,TPG,THD FOR:6-32 X 0.312 INCH,PNH STL	83385	OBD
-10	211-0008-00			4		. SCREW,MACHINE:4-40 X 0.25 INCH,PNH STL	83385	OBD
-11	131-0890-00			2		. LOCK,CONNECTOR:4-40 X 0.312 L	71468	D 20418-2
						- - - * - - -		
	----- -----			-		. . CKT BOARD ASSY INCLUDES:		
-12	131-0993-00			1		. . LINK,TERM.CONNE:2 WIRE BLACK	00779	530153-2
-13	131-0608-00			38		. . CONTACT,ELEC:0.365 INCH LONG	22526	47357
-14	214-1458-00			1		. . KEY,CONN PLZN:	05574	091-0071-00
-15	131-0791-00			1		. . TERM,STUD:0.375 L X 0.0203 INCH	80009	131-0791-00
						(ATTACHING PARTS)		
-16	211-0198-00			2		. . SCREW,MACHINE:4-40 X 0.438 PNH,STL,POZ	77250	OBD
						- - - * - - -		
-17	129-0248-00			2		. . SPACER,POST:0.663 INCH LONG,BRS	80009	129-0248-00
-18	136-0578-00			1		. . SOCKET,PLUG-IN:24 DIP,LOW PROFILE	01295	C932402
-19	136-0623-00			1		. . SOCKET,PLUG-IN:40 DIP,LOW PROFILE	73803	C934002
-20	351-0500-00			4		. . GUIDE,CKT CARD:	80009	351-0500-00
						(ATTACHING PARTS FOR EACH)		
-21	211-0198-00			1		. . SCREW,MACHINE:4-40 X 0.438 PNH,STL,POZ	77250	OBD
						- - - * - - -		
-22	131-1090-00			2		. . CONTACT,ELEC:DL TERMN,BRS	80009	131-1090-00
-23	131-1437-00			1		. . CONN,RCPT,ELEC:25 FEMALE CONTACT	54492	DB-25-S-F179
-24	129-0112-00			6		. . SPACER,POST:0.406 LONG	80009	129-0112-00
-25	----- -----			1		. CKT BOARD ASSY:ROM(SEE A2 EPL)		
-26	131-0608-00			34		. . CONTACT,ELEC:0.365 INCH LONG	22526	47357
-27	136-0578-00			6		. . SOCKET,PLUG-IN:24 DIP,LOW PROFILE	01295	C932402
-28	----- -----			1		. CKT BOARD ASSY:DAUGHTER(SEE EPL)		
-29	----- -----			1		. . CABLE ASSY:3M		
-30	344-0131-00			4		. . CLIP,SPG TENS:CIRCUIT CARD MOUNTING	80009	344-0131-00
						(ATTACHING PARTS FOR EACH)		
-31	211-0008-00			1		. . SCREW,MACHINE:4-40 X 0.25 INCH,PNH STL	83385	OBD
-32	210-0406-00			1		. . NUT,PLAIN,HEX.:4-40 X 0.188 INCH,BRS	73743	2X12161-402
						- - - * - - -		
						ACCESSORIES		
	012-0689-00			1		CABLE,INTCON:192.0" LONG	80009	012-0689-00
	013-0173-01			1		ADAPTER ASSY:SELF TEST	80009	013-0173-01
	334-2788-00			5		OVERLAY,KYBD:		
	070-2066-01			1		MANUAL TERM:INST,4050/R5282 COMM I/F	80009	070-2066-01

Section 11
ROM PACK DATA SHEETS

This section contains data sheets on the optional ROM packs and special interfaces that can be used with the 4051 Graphic System. Each data sheet gives a brief description of the device, replaceable parts information, schematic diagram and any other pertinent service information (e.g. checksum data for ROMs).

There are data sheets in this section for the following:

021-0189-00 PRINTER INTERFACE
4051R01 MATRIX FUNCTIONS ROM PACK
4051R05 BINARY PROGRAM LOADER ROM PACK
4051R06 EDITOR ROM PACK

_____
_____
_____
_____
_____
_____

Space is made available for you to enter the names or titles of other data sheets you may wish to add at some future time.

Introduction For Printer Interface Data Sheet

021-0189-00 PRINTER INTERFACE

The TEKTRONIX 021-0189-00 Printer Interface is a general purpose communications module that is used by the 4051 Graphic System to output data to any RS-232 compatible printing device (i.e., the TEKTRONIX 4641 Character Line Printer). The Printer Interface can only be used to output data.

The TEKTRONIX 4051 Graphic System uses the Printer Interface in conjunction with a Firmware Backpack (020-0147-00) or Communications Backpack (021-0188-00). The box portion of the Printer Interface is inserted into one of the ROM pack slots found in a backpack. The connector end is plugged into the RS-232 communications port of the printing equipment.

For details of operation, refer to the **4051 Option 10 RS-232 Printer Interface Manual,** part number 070-2119-00.

Tektronix®
COMMITTED TO EXCELLENCE

data sheet

CSG PUBLICATIONS/RESEARCH

4051R01
4051R05
4051R06

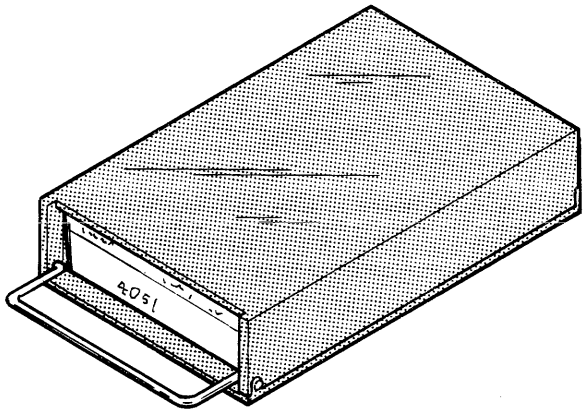

The Tektronix 4051R01 Matrix Function, 4051R05 Binary Program Loader and the 4051R06 Editor are Rom Packs which add to the capabilities of the 4051 Graphic Systems. The ROM Packs do this without altering or disturbing the normal operation of the system or occuping any of the available RAM (Random Access Memory) storage space.

This Data Sheet provides supplimentary service information for the ROM Packs. Included are Parts Lists, Schematics, and a Troubleshooting Data Table giving ROM checksum information. The ROM checksum is an 8-bit sum of all data bytes within a ROM chip ignoring arithmetic overflow.

NO. 062-3106-00
DATE Feb. 1977
COPYRIGHT © 1977
TEKTRONIX INC.
ALL RIGHTS RESERVED

Refer to the [4051R01 Matrix Functions / 4051R05 Binary Program Loader / 4051R06 – 4051 Editor] manual for operator information. Refer to the 4051 Service manuals for detailed service information.

ROM PACK CHECKSUM TABLES

4051R01 MATRIX FUNCTIONS

Circuit No.	Checksum	Part No.
U1	FF	See Replaceable Parts List

4051R05 BINARY PROGRAM LOADER

Circuit No.	Checksum	Part No.
U1	05	See Replaceable Parts List
U11	FF	See Replaceable Parts List

4051R06 EDITOR

Circuit No.	Checksum	Part No.
U1	FF	See Replaceable Parts List
U11	59	See Replaceable Parts List
U21	D1	See Replaceable Parts List
U31	FF	See Replaceable Parts L

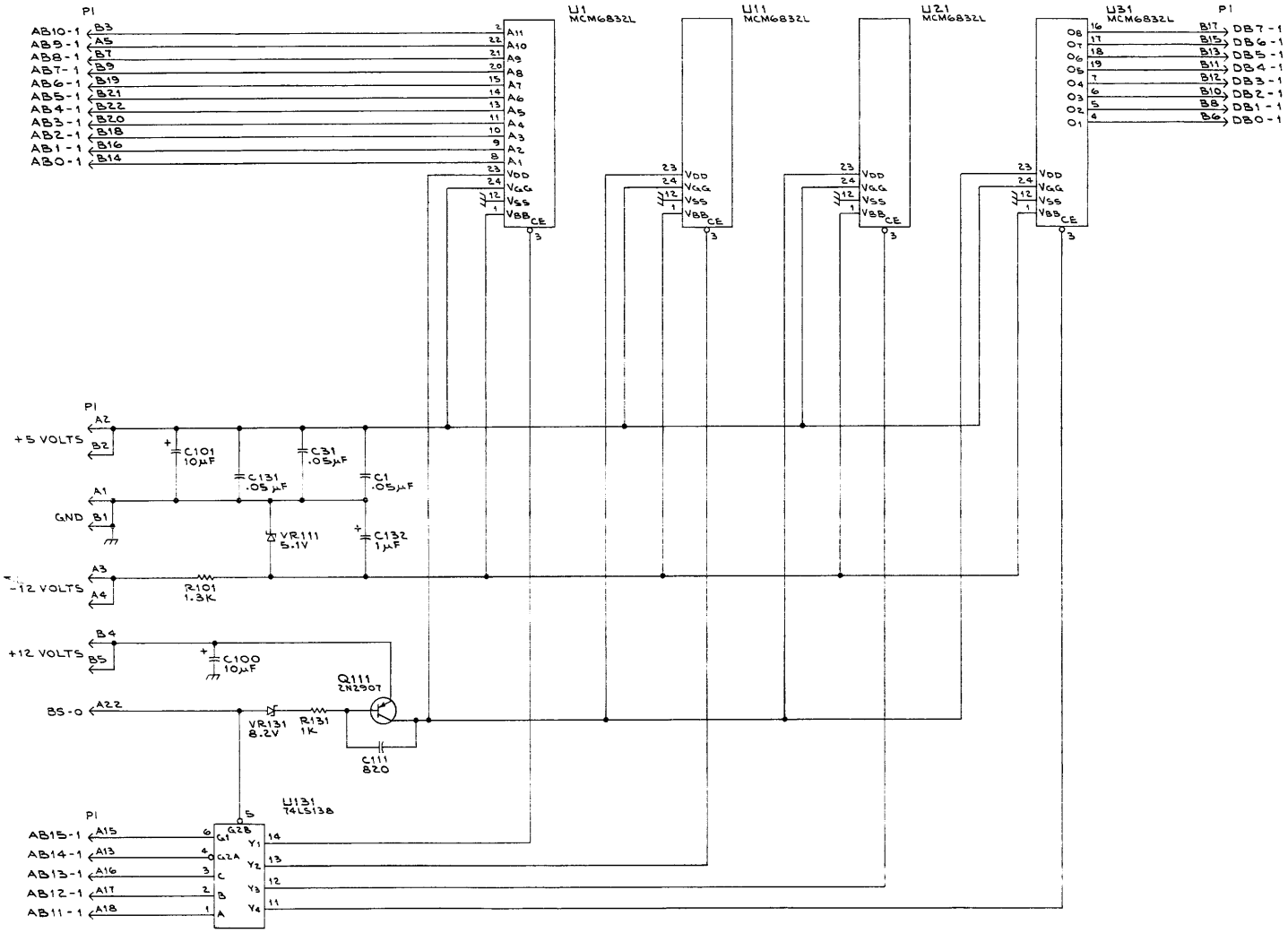
P1
AB10-1
AB9-1
AB8-1
AB7-1
AB6-1
AB5-1
AB4-1
AB3-1
AB2-1
AB1-1
AB0-1
U1
MCM6832L
U11
MCM6832L
U21
MCM6832L
U31
MCM6832L
DB7-1
DB6-1
DB5-1
DB4-1
DB3-1
DB2-1
DB1-1
DB0-1
+5 VOLTS
GND
-12 VOLTS
+12 VOLTS
C101 10µF
C131 .05µF
C31 .05µF
C1 .05µF
C132 1µF
VR111 5.1V
R101 1.3K
C100 10µF
Q111 2N2907
VR131 8.2V
R131 1K
C111 820
BS-0
U131 74LS138
AB15-1
AB14-1
AB13-1
AB12-1
AB11-1

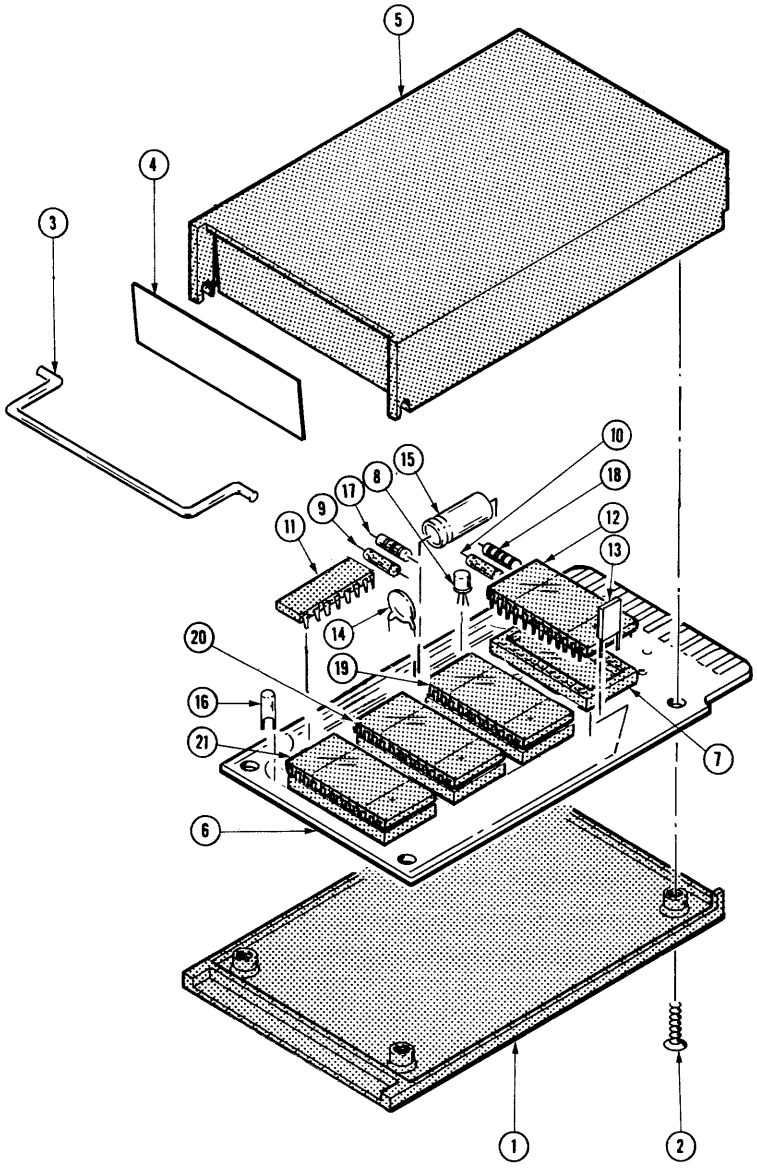
5
4
3
10
18
15
8
17
9
12
11
13
14
20
19
16
7
21
6
1
2

REPLACEABLE PARTS LIST

Fig. & Index No.	Tektronix Part No.	Serial/Model No. Eff	Dscont	Qty	1 2 3 4 5 Name & Description	Mfr Code	Mfr Part Number
	4051R01			1	MATRIX FUNCTION:4051 ROM PACK	80009	4051R01
-1	380-0384-01			1	. HSG,HALF,RDOUT:LID	80009	380-0384-01
					(ATTACHING PARTS)		
-2	211-0102-00			4	. SCREW,MACHINE:4-40 X 0.500",FLH,STL	83385	OBD
					- - - * - - -		
-3	367-0189-00			1	. HANDLE,BOW:	80009	367-0189-00
-4	334-2872-00			1	. MKR SET,IDENT:	80009	334-2872-00
-5	380-0343-01			1	. HSG HALF,PTR:INNER,PLASTIC	80009	380-0343-01
-6	670-4350-00			1	. CKT BOARD ASSY:MATRIX ROM PACK	80009	670-4350-00
-7	136-0578-00			1	. . SOCKET,PLUG-IN:24 DIP,LOW PROFILE	01295	C932402
-8	151-0301-00			1	. . TRANSISTOR:SILICON,PNP,(Q111)	04713	2N2907A
-9	152-0217-00			1	. . SEMICOND DEVICE:ZENER,0.4W,8.2V,5%,(VR131)	80009	152-0217-00
-10	152-0195-00			1	. . SEMICOND DEVICE:ZENER,0.4W,5.1V,5%,(VR111)	80009	152-0195-00
-11	156-0469-00			1	. . MICROCIRCUIT,DI:3-LINE TO 8-LINE DCDR(U131)	01295	SN74L5138N
-12	156-0776-00			1	. . MICROCIRCUIT,DI:2048 X 8 PROM,(U1)	80009	156-0776-00
-13	283-0010-00			2	. . CAP.,FXD,CER DI:0.05UF,+100-20%,50V,(C1,C31)	56289	273C20
-14	283-0116-00			1	. . CAP ,FXD,CER DI:820PF,5%,500V,(C111)	72982	801-547B821J
-15	290-0106-00			2	. . CAP.,FXD,ELCTLT:10UF,+75-10%,15V(C100,C101)	56289	30D106G015BA9
-16	290-0534-00			1	. . CAP.,FXD,ELCTLT:1UF,20%,35V,(C132)	56289	196D105X0035HA1
-17	315-0102-00			1	. . RES.,FXD,CMPSN:1K OHM,5%,0.25,(R131)	01121	CB1025
-18	315-0132-00			1	. . RES.,FXD,CMPSN:1.3K OHM,5%,0.25W,(R101)	01121	CB1325
	4051R05			1	BIN PRGM LOADER:4051 ROM PACK	80009	4051R05
-1	380-0384-01			1	. HSG,HALF,RDOUT:LID	80009	380-0384-01
					(ATTACHING PARTS)		
-2	211-0102-00			4	. SCREW,MACHINE:4-40 X 0.500",FLH,STL	83385	OBD
					- - - * - - -		
-3	367-0189-00			1	. HANDLE,BOW:	80009	367-0189-00
-4	334-2946-00			1	. MARKER,IDENT:MARKED 4051R05	80009	334-2946-00
-5	380-0343-01			1	. HSG HALF,PTR:INNER,PLASTIC	80009	380-0343-01
-6	670-4350-03			1	. CKT BOARD ASSY:BINERY PRGM LOADER ROM PACK	80009	670-4350-03
-7	136-0578-00			2	. . SOCKET,PLUG-IN:24 DIP,LOW PROFILE	01295	C932402
-8	151-0301-00			1	. . TRANSISTOR:SILICON,PNP,(Q111)	04713	2N2907A
-9	152-0217-00			1	. . SEMICOND DEVICE:ZENER,0.4W,8.2V,5%,(VR131)	80009	152-0217-00
-10	152-0195-00			1	. . SEMICOND DEVICE:ZENER,0.4W,5.1V,5%,(VR111)	80009	152-0195-00
-11	156-0469-00			1	. . MICROCIRCUIT,DI:3-LINE TO 8-LINE DCDR(U131)	01295	SN74L5138N
-12	156-0856-00			1	. . MICROCIRCUIT,DI:16K OHM,CUSTOM MASK,(U1)	80009	156-0856-00
-13	283-0010-00			2	. . CAP.,FXD,CER DI:0.05UF,+100-20%,50V(C1,C31)	56289	273C20
-14	283-0116-00			1	. . CAP.,FXD,CER DI:820PF,5%,500V,(C111)	72982	801-547B821J
-15	290-0106-00			2	. . CAP.,FXD,ELCTLT:10UF,+75-10%,15V(C100,C101)	56289	30D106G015BA9
-16	290-0534-00			1	. . CAP.,FXD,ELCTLT:1UF,20%,35V,(C132)	56289	196D105X0035HA1
-17	315-0102-00			1	. . RES.,FXD,CMPSN:1K OHM,5%,0.25,(R131)	01121	CB1025
-18	315-0132-00			1	. . RES.,FXD,CMPSN:1.3K OHM,5%,0.25W,(R101)	01121	CB1325
-19	156-0857-00			1	. . MICROCIRCUIT,DI:16K ROM,CUSTOM MASK,(U11)	80009	156-0857-00
	4051R06			1	EDITOR:4051 ROM PACK	80009	4051R06
-1	380-0384-01			1	. HSG,HALF,RDOUT:LID	80009	380-0384-01
					(ATTACHING PARTS)		
-2	211-0102-00			4	. SCREW,MACHINE:4-40 X 0.500",FLH,STL	83385	OBD
					- - - * - - -		
-3	367-0189-00			1	. HANDLE,BOW:	80009	367-0189-00
-4	334-2947-00			1	. MARKER,IDENT:MARKED 4051R06	80009	334-2947-00
-5	380-0343-01			1	. HSG,HALF,PTR:INNER,PLASTIC	80009	380-0343-01
-6	670-4350-01			1	. CKT BOARD ASSY:EDITOR ROM PACK	80009	670-4350-01
	670-4350-05			1	. CKT BOARD ASSY:EDITOR ROM PACK	80009	670-4350-05
	----- -----			-	. . EACH CKT BOARD ASSY INCLUDES:		
-7	136-0578-00			4	. . SOCKET,PLUG-IN:24 DIP,LOW PROFILE	01295	C932402
-8	151-0301-00			1	. . TRANSISTOR:SILICON,PNP	04713	2N2907A
-9	152-0217-00			1	. . SEMICOND DEVICE:ZENER,0.4W,8.2V,5%,(VR131)	80009	152-0217-00
-10	152-0195-00			1	. . SEMICOND DEVICE:ZENER,0.4W,5.1V,5%,(VR111)	80009	152-0195-00
-11	156-0469-00			1	. . MICROCIRCUIT,DI:3-LINE TO 8-LINE DCDR,(U131)	01295	SN74LS138N

Fig. & Index No.	Tektronix Part No.	Serial/Model No. Eff	Dscont	Qty	1 2 3 4 5	Name & Description	Mfr Code	Mfr Part Number
-12	156-0772-00[1]			1	. .	MICROCIRCUIT,DI:2048 X 8 PROM,(U1)	80009	156-0772-00
	156-0772-01[2]			1	. .	MICROCIRCUIT,DI:ROM,PROGRAMMED,(U1)	80009	156-0772-01
-13	283-0010-00			3	. .	CAP.,FXD,CER DI:0.05UF,+100-20%,50V,	56289	273C20
	----- -----			-	. .	(C1,C31,C131)		
-14	283-0116-00			1	. .	CAP.,FXD,CER DI:820PF,5%,500V,(C111)	72982	801-547B821J
-15	290-0106-00			2	. .	CAP.,FXD,ELCTLT:10UF,+75-10%,15V,(C100,C101)	56289	30D106G015BA9
-16	290-0534-00			1	. .	CAP.,FXD,ELCTLT:1UF,20%,35V,(C132)	56289	196D105X0035HA1
-17	315-0102-00			1	. .	RES.,FXD,CMPSN:1K OHM,5%,0.0.25W,(R131)	01121	CB1025
-18	315-0132-00			1	. .	RES.,FXD,CMPSN:1.3K OHM,5%,0.25W,(R101)	01121	CB1325
-19	156-0773-00[1]			1	. .	MICROCIRCUIT,DI:2048 X 8 PROM	80009	156-0773-00
	156-0773-01			1	. .	MICROCIRCUIT,DI:ROM PROGRAMMED,(U11)	80009	156-0773-01
-20	156-0774-00[1]			1	. .	MICROCIRCUIT,DI:2048 X 8 PROM,(U21)	80009	156-0774-00
	156-0774-01			1	. .	MICROCIRCUIT,DI:ROM PROGRAMMED,(U21)	80009	156-0774-01
-21	156-0775-00[1]			1	. .	MICROCIRCUIT,DI:2048 X 8 PROM,(U31)	80009	156-0775-00
	156-0775-01			1	. .	MICROCIRCUIT,DI:ROM PROGRAMMED,(U31)	80009	156-0775-01
						STANDARD ACCESSORIES		
	062-3106-00			1		DATA SHEET:4051R01,4051R05,4051R06	80009	062-3106-00
	334-2954-00			5		OVERLAY,KYBD:EDITOR	80009	334-2954-00

[1]Used on 670-4350-01 only.
[2]Used on 670-4350-05 only.

CROSS INDEX—MFR. CODE NUMBER TO MANUFACTURER

Mfr. Code	Manufacturer	Address	City, State, Zip
01121	ALLEN-BRADLEY COMPANY	1201 2ND STREET SOUTH	MILWAUKEE, WI 53204
01295	TEXAS INSTRUMENTS, INC., SEMICONDUCTOR GROUP	P O BOX 5012, 13500 N CENTRAL EXPRESSWAY	DALLAS, TX 75222
04713	MOTOROLA, INC., SEMICONDUCTOR PROD. DIV.	5005 E MCDOWELL RD,PO BOX 20923	PHOENIX, AZ 85036
56289	SPRAGUE ELECTRIC CO.		NORTH ADAMS, MA 01247
72982	ERIE TECHNOLOGICAL PRODUCTS, INC.	644 W. 12TH ST.	ERIE, PA 16512
80009	TEKTRONIX, INC.	P O BOX 500	BEAVERTON, OR 97077
83385	CENTRAL SCREW CO.	2530 CRESCENT DR.	BROADVIEW, IL 60153

Tektronix®
COMMITTED TO EXCELLENCE

data sheet

CSG PUBLICATIONS/RESEARCH

RS232 PRINTER INTERFACE for 4051

Part No. 021-0189-00

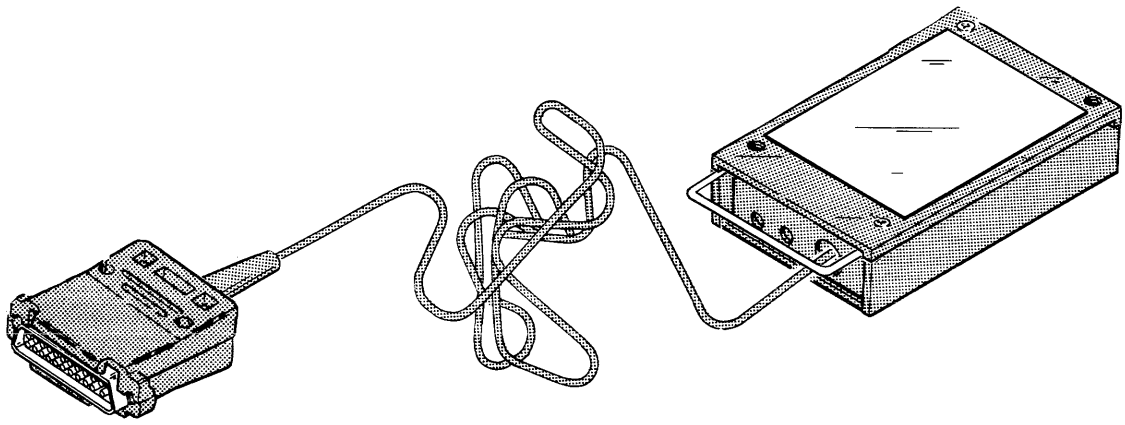

The Tektronix 021-0189-00 Printer Interface is a general purpose communications module that is used by the 4051 Graphic System to output data to any RS232 compatible printing device (i.e. the Tektronix 4641 Character Line Printer). The Printer Interface can only be used to output data.

The Tektronix 4051 Graphic System uses the Printer Interface in Conjuction with a Firmware Backpack (020-0147-00) or Communications Backpack (021-0188-00). The box portion of the Printer Interface is inserted into one of the ROM pack slots found in a backpack. The connector end is plugged into the RS232 communications port of the printing equipment.

For details of operation, refer to the 4051 Option 10 RS232 Printer Interface Manual, part number 070-2119-00.

NO. 062-3079-00
DATE NOV.1976
COPYRIGHT © 1976
TEKTRONIX INC.
ALL RIGHTS RESERVED

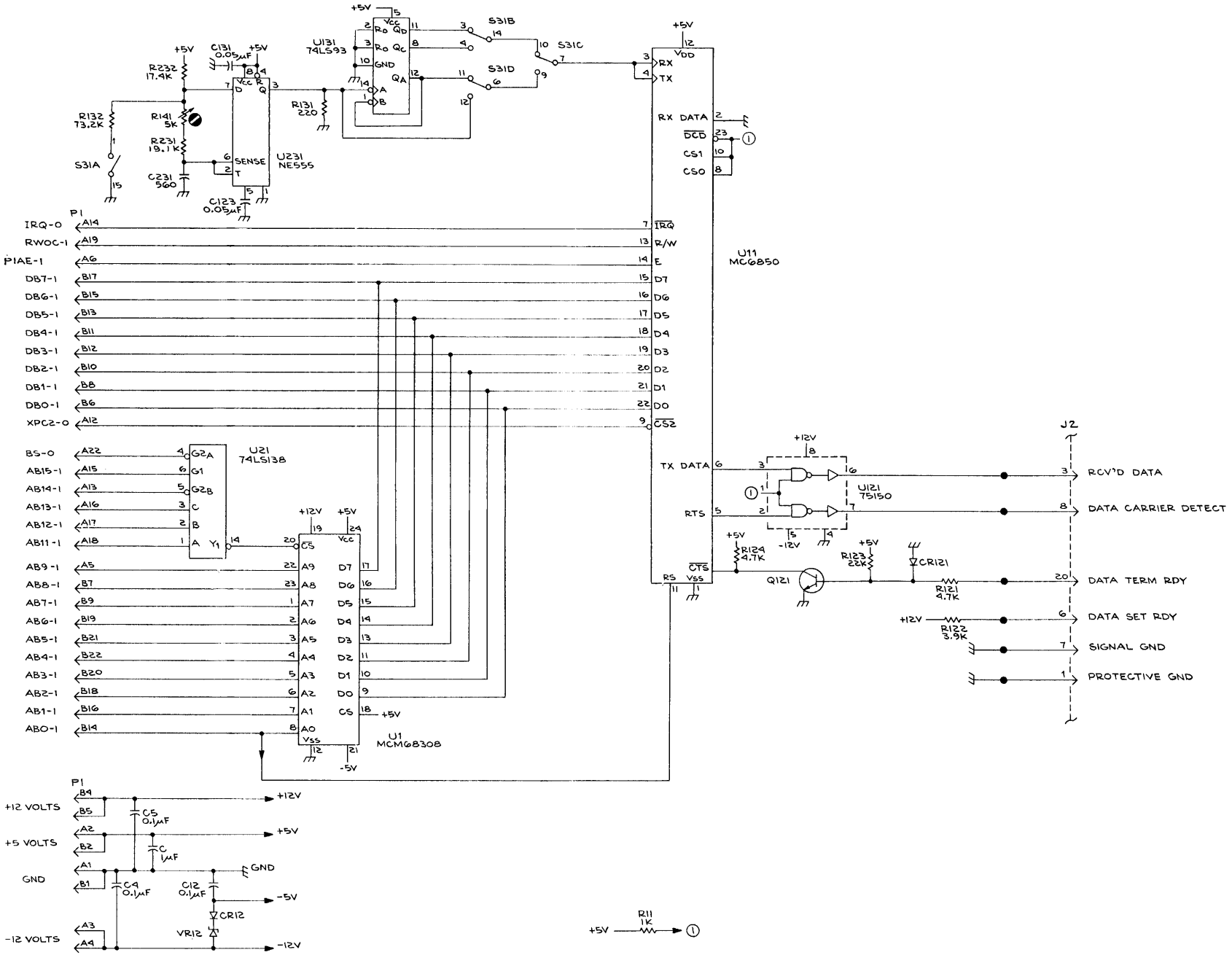

021-0189-00

RS 232 PRINTER INTERFACE

@

REPLACEABLE PARTS LIST

Ckt No.	Tektronix Part No.	Serial/Model No. Eff	Dscont	Name & Description	Mfr Code	Mfr Part Number
	670-4367-00			CKT BOARD ASSY:LOW COST RS232 ROM PACK	80009	670-4367-00
C1	283-0010-00			CAP.,FXD,CER DI:0.05UF,+100-20%,50V	56289	273C20
C2	283-0177-00			CAP.,FXD,CER DI:1UF,+80-20%,25V	72982	8131N039651105Z
C4	283-0111-00			CAP.,FXD,CER DI:0.1UF,20%,50V	72982	8131N075651104M
C5	283-0111-00			CAP.,FXD,CER DI:0.1UF,20%,50V	72982	8131N075651104M
C11	283-0010-00			CAP.,FXD,CER DI:0.05UF,+100-20%,50V	56289	273C20
C12	283-0111-00			CAP.,FXD,CER DI:0.1UF,20%,50V	72982	8131N075651104M
C21	283-0010-00			CAP.,FXD,CER DI:0.05UF,+100-20%,50V	56289	273C20
C123	283-0010-00			CAP.,FXD,CER DI:0.05UF,+100-20%,50V	56289	273C20
C131	283-0010-00			CAP.,FXD,CER DI:0.05UF,+100-20%,50V	56289	273C20
C231	283-0687-00			CAP.,FXD,MICA D:560PF,2%,300V	72136	DM15E561G0300
CR12	152-0141-02			SEMICOND DEVICE:SILICON,30V,150MA	07910	1N4152
CR121	152-0141-02			SEMICOND DEVICE:SILICON,30V,150MA	07910	1N4152
Q121	151-0190-00			TRANSISTOR:SILICON,NPN	80009	151-0190-00
R11	315-0102-00			RES.,FXD,CMPSN:1K OHM,5%,0.25W	01121	CB1025
R121	315-0472-00			RES.,FXD,CMPSN:4.7K OHM,5%,0.25W	01121	CB4725
R122	315-0392-00			RES.,FXD,CMPSN:3.9K OHM,5%,0.25W	01121	CB3925
R123	315-0223-00			RES.,FXD,CMPSN:22K OHM,5%,0.25W	01121	CB2235
R124	315-0472-00			RES.,FXD,CMPSN:4.7K OHM,5%,0.25W	01121	CB4725
R131	315-0221-00			RES.,FXD,CMPSN:220 OHM,5%,0.25W	01121	CB2215
R132	321-0372-00			RES.,FXD,FILM:73.2K OHM,1%,0.125W	75042	CEAT0-7322F
R141	311-1238-00			RES.,VAR,NONWIR:5K OHM,10%,0.50W	73138	72X-27-0.502K
R231	321-0316-00			RES.,FXD,FILM:19.1K OHM,1%,0.125W	91637	MFF1816G19101F
R232	321-0312-00			RES.,FXD,FILM:17.4K OHM,1%,0125W	75042	CEAT0-1742F
S31	260-1777-00			SWITCH,ROTARY:16 POSN,28VDC,100MA	00779	53137-1
U1	156-0764-00			MICROCIRCUIT,DI:1024 X 8 ROM	04713	MCM68308L
U11	156-0658-00			MICROCIRCUIT,DI:ASYNCHRONUS COMM INTFC ADPTR	04713	MC6850L
U21	156-0469-00			MICROCIRCUIT,DI:3 TO 8-LINE DECODER	01295	SN74LS138N
U121	156-0139-00			MICROCIRCUIT,LI:DUAL LINE DRIVER	01295	SN75150P
U131	156-0646-00			MICROCIRCUIT,DI:4-BIT BINARY COUNTER	01295	SN74LS93N
U231	156-0402-00			MICROCIRCUIT,DI:TIMER	18324	NE555V
VR12	152-0280-00			SEMICOND DEVICE:ZENER,0.4W,6.2V,5%	04713	1N753A

CROSS INDEX—MFR. CODE NUMBER TO MANUFACTURER

Mfr. Code	Manufacturer	Address	City, State, Zip
00779	AMP, INC.	P. O. BOX 3608	HARRISBURG, PA 17105
01121	ALLEN-BRADLEY CO.	1201 2ND ST. SOUTH	MILWAUKEE, WI 53204
01295	TEXAS INSTRUMENTS, INC., SEMICONDUCTOR GROUP	P. O. BOX 5012	DALLAS, TX 75222
04713	MOTOROLA, INC., SEMICONDUCTOR PRODUCTS DIV.	5005 E. MCDOWELL RD.	PHOENIX, AZ 85036
07910	TELEDYNE SEMICONDUCTOR	12515 CHADRON AVE.	HAWTHORNE, CA 90250
18324	SIGNETICS CORP.	811 E. ARQUES	SUNNYVALE, CA 94086
56289	SPRAGUE ELECTRIC CO.		NORTH ADAMS, MA 01247
71468	ITT CANNON ELECTRIC	666 E. DYER RD.	SANTA ANA, CA 92702
72136	ELECTRO MOTIVE CORP., SUB OF INTERNATIONAL ELECTRONICS CORP.	SOUTH PARK AND JOHN STREETS	WILLIMANTIC, CT 06226
72982	ERIE TECHNOLOGICAL PRODUCTS, INC.	644 W. 12TH ST.	ERIE, PA 16512
73138	BECKMAN INSTRUMENTS, INC., HELIPOT DIV.	2500 HARBOR BLVD.	FULLERTON, CA 92634
75042	TRW ELECTRONIC COMPONENTS, IRC FIXED RESISTORS, PHILADELPHIA DIVISION	401 N. BROAD ST.	PHILADELPHIA, PA 19108
80009	TEKTRONIX, INC.	P. O. BOX 500	BEAVERTON, OR 97005
83385	CENTRAL SCREW CO.	2530 CRESCENT DR.	BROADVIEW, IL 60153
91260	CONNER SPRING AND MFG. CO.	1729 JUNCTION AVE.	SAN JOSE, CA 95112

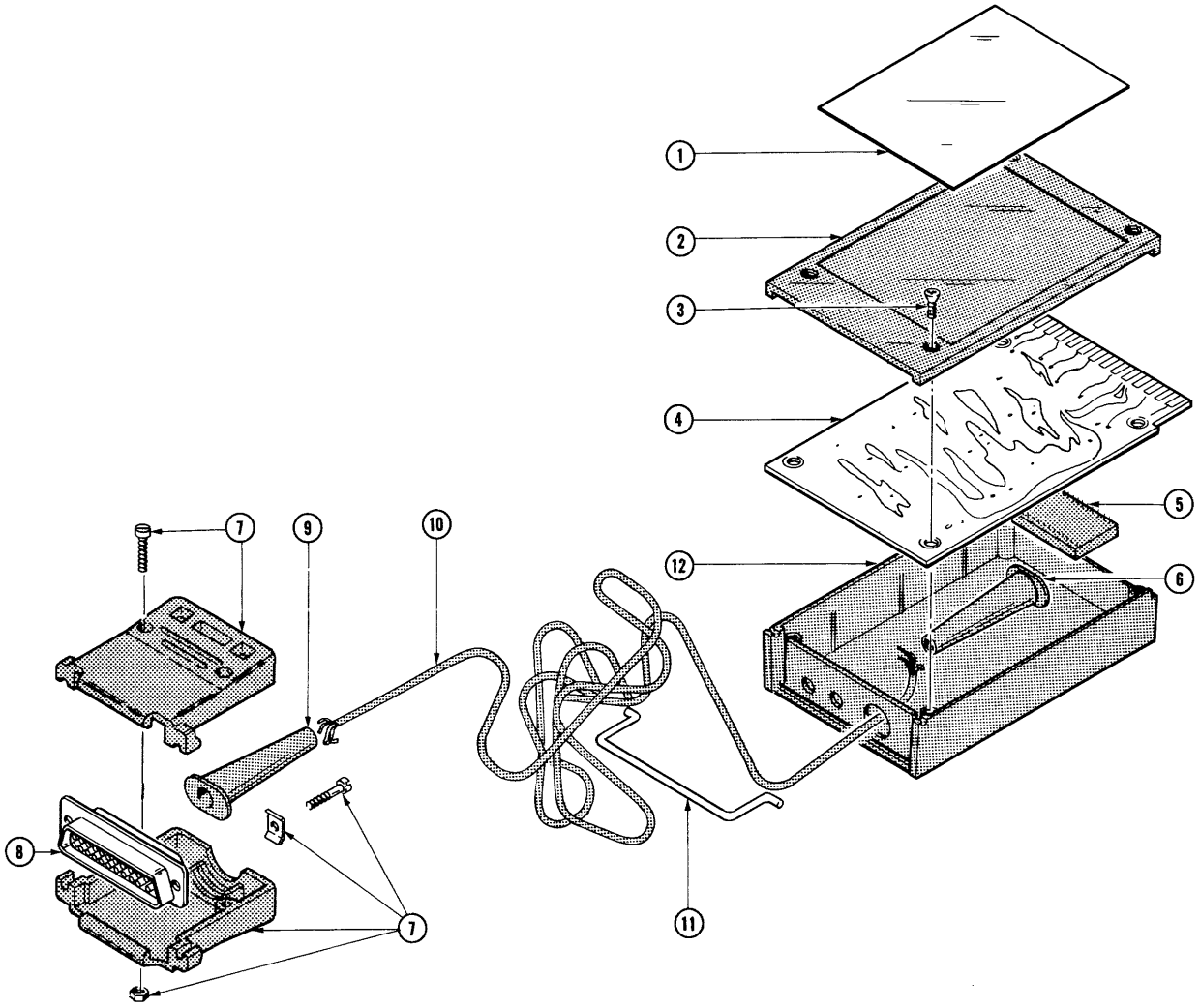

REPLACEABLE PARTS LIST

Fig. & Index No.	Tektronix Part No.	Serial/Model No. Eff	Dscont	Qty	1 2 3 4 5	Name & Description	Mfr Code	Mfr Part Number
-1	334-2826-00			1		PLATE,IDENT:	80009	334-2826-00
-2	380-0384-01			1		HSG,HALF,RDOUT:LID	80009	380-0384-01
						(ATTACHING PARTS)		
-3	211-0102-00			4		SCREW,MACHINE:4-40 x 0.500 INCH,FLH,STL	83385	OBD
						- - - * - - -		
-4	----- -----			1		CKT BOARD ASSY:RS232 ROM PACK(SEE EPL)		
-5	136-0578-00			2		. SOCKET,PLUG-IN:24 DIP,LOW PROFILE	01295	C932402
-6	200-1042-03			1		CABLE NIP,ELEC:0.194 ID,2.0 1, PLASTIC	80009	200-1042-03
	012-0695-00			1		CABLE,INTCON:120.0 LONG	80009	012-0695-00
-7	200-1667-00			1		. COVER,ELEC CONN:26 POSN,W/HDW	00779	5091-100-1
-8	131-0569-00			1		. CONNECTOR,RCPT,:25 PIN,FEMALE	71468	DB25S
-9	200-1042-03			1		. CABLE,NIP,ELEC:0.194 ID,2.0 L,PLASTIC	80009	200-1042-03
-10	175-1935-00			1		. CABLE,SP,ELEC:5.26 AWG,600V,120 LONG	80009	175-1935-00
-11	367-0189-00			1		HANDLE,BOW:	91260	OBD
-12	380-0343-02			1		HSG,HALF,RDOUT:INNER	80009	380-0343-02
						STANDARD ACCESSORIES		
	062-3079-00			1		DATA SHEET:021-0189-00	80009	062-3079-00

Appendix A

INDEX OF SIGNAL NAMES

Interpretation of true and false logic states on the schematic diagrams uses this convention. Whenever a signal is followed by a dash one (NAME-1), the voltage is logically *high* for the signal to be true. Whenever a signal is followed by a dash zero (NAME-0), the voltage is logically *low* for the signal to be true.

AB0 thru AB15	ADDRESS BUS LINES These lines comprise the address bus. Data on the address bus determines which memory location or peripheral interface is to be activated.
ABA	ADDRESS BUS AVAILABLE This signal is the buffered bus available signal from the microprocessor. The true state specifies that the microprocessor is not using the address bus and that any other device may use the bus at this time. Memory refresh activity occurs at times when ABA is true. The 4051 system test fixture uses this signal to enable memory input/output operations when the microprocessor is halted.
ADOT	ALPHANUMERIC DOT This signal causes the display of a stored dot in the drawing of a printable character on the crt.
ANODE	ANODE This is a voltage line controlling the flood guns. When the display is in view mode, the anode voltage is +150 volts dc. When the display is in hold mode, the anode voltage alternates between +150 volts and zero volts, turning the flood guns on and off, to maintain the display of information on the crt.
ATN	ATTENTION This signal is activated by the 4051 when it is transmitting multiline interface messages over the General Purpose Interface Bus (GPIB). Only an active controller (4051 assumes it is the only controller) asserts ATN. When ATN is true, data on the data lines DIO1 thru DIO8 is interpreted as a talk address, listen address, untalk, unlisten,

or any other multiline interface message specified in the IEEE Standard 488-1975 (IEEE Standard Digital Interface for Programmable Instrumentation. When ATN is false, the assigned talker can send device dependent information over the data lines DIO1 thru DIO8.

BIAS

BIAS
This voltage is generated by deflection amplifier circuitry on the display board to establish four constant current sources for proper display operation. Two of the current sources enable operation of the deflection amplifier outputs. The other two enable the multiplexing of crt deflection control between the cpu board and an optional Hard Copy Unit.

BIAS

BIAS
This voltage is generated in the digital-to-analog circuitry on the cpu board to bias the current summing amplifiers of the digital-to-analog converters in their active region.

BREAK

BREAK
This signal is used to light the BREAK light. This light being on indicates that program execution will halt at the completion of the current BASIC program language statement, at which time the BREAK light will go out.

BSCOM

BANK SWITCH COMMUNICATION
This signal is generated by the banks switch data decoder to enable an 8K bank of read only memory (ROM) that contains code to govern RS-232 communication activity. To activate BSCOM, the hexadecimal data (10) must be loaded into the bank switch data register. LBS is active when the bank switch data register is addressed. The bbank switch data register is located in the backpack.

BS(L)

BANK SWITCH LEFT
This signal is generated by the bank switch data decoder to enable an 8K bank of read only memory (ROM) residing in the left backpack slot. The bank switch data register is located in the backpack.

BS(R)

BANK SWITCH RIGHT
This signal is generated by the bank switch data decoder to enable an 8K bank of read only memory (ROM) residing in the right backpack slot. The bank switch data register is located in the backpack.

BSX(L)

BANK SWITCH EXPANSION LEFT
This signal is generated by the bank switch data decoder to enable an 8K bank of read only memory (ROM) that resides in any of 8 slots in an optional ROM Expander Unit. The particular expander slot is determined by the 3 least significant bits of data loaded into a bank switch register.

BSX(R)

BANK SWITCH EXPANSION RIGHT
This signal is generated by the bank switch data decoder to enable an 8K bank of read only memory (ROM) that reside in any of 8 slots in an optional ROM Expander Unit. The particular expander slot is determined by the 3 least significant bits of data loaded into a bank switch register.

BUFCLK

BUFFER CLOCK
This signal is used to strobe data into the digital-to-analog converter data registers. It restarts a 90 second view mode timer. And, if vectors are to be drawn, it initiates a 3.7 millisecond pulse (VPULSE) used to time vector draws.

BUSY

BUSY
This signal lights the BUSY light to indicate that the 4051 is busy transferring or processing data. BUSY is also driven by a programmed square wave to cause an audio tone at the speaker.

CBACIA

COMMUNICATION BACKPACK ACIA
This signal is a line from an address asynchronous communication interface adapter is being addressed.

CTRL

CONTROL
This signal is generated by pressing the CONTROL or CTRL key on the keyboard.

COPY

COPY
This signal is generated by programming to initiate hard copy activity. It is also asserted when the MAKE COPY key on the keyboard is pressed.

COPYEN

COPY ENABLE
This signal is generated by the OR of READ and WAIT signals from an optional Hard Copy Unit enabling the Hard Copy Unit to control circuitry on the display board. When the COPYEN signal is true, the Hard Copy Unit is either producing a hard copy or waiting to produce a hard copy of information on the crt.

COPYEN is driven false whenever the internal magnetic tape drive is in motion, preventing the Hard Copy Unit from simultaneously controlling the display circuitry. Since both the crt display and tape drives are large consumers of energy, and that there is limited power from the power supply, a requirement exists that the display deflection amplifiers and tape motors cannot be simultaneously active.

CS — CHIP SELECT
This signal is generated by the MCP2 clock to select random access memory (RAM) circuits for read and write operations only when MCP2 is true. When MCP2 is false, memory refresh operations may occur. CS is the inverse of MCP2.

CTS — CLEAR TO SEND
When the 4051 acts as a data set, the signal transmitted at pin 5 of the RS-232 interface on the Communication Backpack enables a computer terminal to send data to the 4051.

When the 4051 acts as a data terminal, CTS becomes **Request To Send** on pin 4 of the RS-232 communication cable. It then notifies data communication equipment that the 4051 wishes to transmit data.

DAV — DATA VALID
The true state of this signal specified that data on the general purpose interface bus (GPIB) data lines (DIO1 thru DIO8) is valid. The 4051 places a true signal on DAV whenever data or remote interface messages are placed on the data lines by the 4051. DAV should remain asserted until NDAC goes false.

The 4051 cannot issue DAV if NRFD is true. A true on NRFD does not remove an already valid DAV signal.

The 4051 cannot issue DAV if it is a listener on the GPIB.

DB0 thru DB7 — DATA BUS
These are the bi-directional data bus lines between the microprocessor and all memory and interface devices in the 4051.

DBE — DATA BUS ENABLE
This signal is an input to the microprocessor to enable the microprocessor to output information on the data bus. DBE is actually the phase two microprocessor clock MCP2. When high, the microprocessor can write data to the data bus, when low, memory refresh activity and other data functions can make use of the data bus.

DCD	DATA CARRIER DETECT When the 4051 acts as a data set, the signal transmitted at pin 8 of the RS-232 interface on the Communication Backpack enables a remote terminal to send and receive data on the interface. When the 4051 acts as a data terminal, DCD becomes **Data Terminal Ready** on pin 20 of the RS-232 communication cable. It tells data communication equipment that the 4051 is ready to send or receive data over the RS-232 interface.
DELAY IN	DELAY INPUT This is a general purpose trigger signal derived from the selected operation trigger (SOT) signal. DELAY OUT is triggered by DELAY IN going high. DELAY OUT remains high for 40 microseconds after being triggered by DELAY IN.
DELAY OUT	DELAY OUTPUT This signal is a general purpose timing pulse of 40 microseconds in duration generated by a one shot on the tape drive board. DELAY OUT is triggered by the DELAY IN signal from the cpu board.
DIO1 thru DIO8	DATA IN AND OUT BUS These are the bi-directional data lines found on the general purpose interface bus (GPIB).
DRBUSY	DIRECT READOUT BUSY This signal goes true any time the display is busy (during an erase cycle or creating a hard copy). DRBUSY notifies the microprocessor that the cpu is involved in a time-consuming task. It also ensures that the flood guns are active when performing a page erase function or a hard copy operation.
DRTAPE	DRIVE TAPE This signal is generated by the microprocessor through a peripheral interface adapter to turn the tape unit motor on and off. When true, the tape motor is turned on; when false, the tape motor is turned off.
DSR	When the 4051 acts as a data set, the DSR signal transmitted on pin 6 of the RS-232 connector on the Communication Backpack tells the terminal that the 4051 is powered up and ready to operate. When the 4051 acts as a data terminal, the passive high has no affect on the DSR signal transmitted by the data communication equipment. DSR is ignored.

DTR	DATA TERMINAL READY When the 4051 acts as a data set, the signal received on pin 20 of the RS-232 connector of the Communication Backpack tells the 4051 that a data terminal is powered up and ready for operation. When the 4051 acts as a data terminal, DTR becomes **Data Carrier Detect** on pin 8 of the RS-232 communication cable. It then notifies the 4051 that a data set is powered up and that a communication link has been established.
DYNAMIC FOCUS	DYNAMIC FOCUS This analog voltage is generated by the deflection amplifiers on the display board to provide correction to compensate for the physical characteristics of the crt. The correction voltage is proportional to (X deflection)^2 + (Y deflection)^2.
EMI0 thru EMI7	EXPANDED MEMORY INPUTS These signal lines are an extension of the bi-directional data bus used to provide data to be written into random access memory (RAM) devices on the expanded memory board within the 4051.
EMO0 thru EMO7	EXPANDED MEMORY OUTPUTS These signal lines are the output data bus from the random access memory (RAM) devices. During RAM read operations, data on the expanded memory output lines is strobed onto the 4051's bi-directional data bus.
EOI	END OR IDENTIFY This signal is sent true by an assigned talker on the general purpose interface bus (GPIB) to signal the end of data. Since parallel poll operations are not implemented in the 4051, the identify function of EOI is not implemented. During normal bus operation, EOI accompanies the last data byte to be transmitted.
EPIAS	EXTERNAL PERIPHERAL INTERFACE ADAPTER SELECT This signal is generated by the read only memory (ROM) page decoder and goes true whenever data on the address bus specifies that a valid external peripheral address may be present. External peripheral interface adapters (PIAs) are optional interfaces in ROM Pack cartridges that are inserted into backpack slots.
ERASE	ERASE This signal is generated on the cpu board to initiate an erase cycle on the display board.

FAST	FAST This signal is generated on the cpu board to determine the operating speed of the tape drive motor. When FAST is true, a tape speed of 90 inches per second is enabled. When FAST is false, the normal read/write tape speed of 30 inches per second is enabled.
FICG	FIND INTERCHARACTER GAP This signal enables the intercharacter gap (ICG) detecting circuitry during magnetic tape read operations. A true state enables the detection of file marks and record marks when the tape is operating at normal speed.
FILFND	FILE FOUND This signal is interrogated to indicate the presence of an interfile gap when the tape is operating in a fast search mode of 90 inches per second. FSENABLE is the signal that enables a timing one-shot that generates FILFND.
F.G. HEATER	FLOOD GUN HEATER VOLTAGE The flood gun heater voltage is a zener regulated voltage of +40 volts above the −20 volt unregulated supply. It is used to heat the filaments in the crt flood guns.
FMARK	FILE MARK This signal is generated by the intercharacter gap (ICG) counter when reading the tape and a file mark has been encountered. A file mark consists of 8 consecutive intercharacter gaps separated by flux reversals on track 0 — one reversal between each ICG.
FSENABLE	FAST SEARCH ENABLE This signal, when true, enables the detection of an interfile gap when the tape is operating in a fast search mode of 90 inches per second.
GICG	GENERATE INTERCHARACTER GAP This signal enables the selected operation trigger (SOT) to become the magnetic tape write clock (WCLK) when generating intercharacter gaps. GICG also forces a data write to track zero by holding WDATA false.
GND	GROUND This is the electrical common or zero potential (chassis voltage) in the 4051.

HALT	HALT This signal is generated by the 4051 system test fixture to stop the operation of the microprocessor. When the microprocessor is stopped, VMA is false, BA is true, and the three-state signals, R/W, address lines and data lines are at a high impedance state. HALT is also used by the 4051 system test fixture to single-step through microprocessor instructions.
IFC	INTERFACE CLEAR This general purpose interface bus (GPIB) signal is asserted by the 4051 to force all devices on the bus to a predetermined quiescent state. The INIT statement in the 4051 BASIC language will cause the IFC line to become active. The 4051, being the only controller and therefore the system controller, is the only source for this signal.
INTER	INTERROGATE This signal is produced by an optional Hard Copy Unit to strobe the crt writing beam (Z axis) while generating a copy of the displayed image. Each time the strobed writing beam lands on a written portion of the crt image, a target signal (TARSIG) is generated and transmitted back to the Hard Copy Unit.
I/O	INPUT/OUTPUT INDICATOR This signal is used to turn on the I/O signal light anytime a device input/output operation (data transfer) is performed.
IPIAS	INTERNAL PERIPHERAL INTERFACE ADAPTER SELECT This signal is generated by the read only memory (ROM) page decoder and goes true whenever data on the address bus specifies that a valid internal peripheral address may be present. Internal peripheral interface adapters (PIAs) are located on the cpu board.
IRQ	INTERRUPT REQUEST This line is a maskable interrupt request line to the microprocessor.
KBCLK	KEYBOARD CLOCK This signal increments a data decoding counter used to interrogate and decode the particular alphanumeric key being pressed. The clock is generated as an output from the random access memory (RAM) refresh counter.
KBCOPY	KEYBOARD COPY This signal is used only by the 4006-1 Display Terminal to initiate a hard copy request.

KBHALT	KEYBOARD HALT This is a signal generated by the keyboard interface to stop the keyboard decoding counter until its contents can be read. The count is placed on the key code lines (KC0 through KC6) to specify which key has been pressed. After the microprocessor has read the key code, the KBHALT line again goes false.
KC0 thru KC6	KEY CODE LINES Data found on these lines specifies which keyboard key has been pressed. Data on these lines becomes stable when the microprocessor issues a KBHALT command to the keyboard. Data on KC0 thru KC6 is converted into ASCII format by the microprocessor for BASIC data processing.
KEY	KEY DOWN This signal goes true whenever a key on the keyboard is pressed.
LAMP ON	LAMP ON This signal is used to turn on the tape sensing lamp when the tape cartridge is inserted into the instrument. Illumination from the lamp is used to activate phototransistors that generate UPHOLE and LOHOLE signals.
LAMP ON RETURN	LAMP ON RETURN This signal is used by logic to sense that a cartridge tape unit has been inserted into the 4051. The tape drive motor is disabled unless the sensing lamp is on and a tape cartridge is inserted into the sstem.
LBS	LOAD BANK SWITCH This signal is generated whenever the bank switch memory location is addressed. Data written into the bank switch register indicates which 8K ROM bank is selected to use the shared ROM address space. The data also determines which of several possible external interfaces may be activated.
LDCLK	LOAD CLOCK This signal is activated whenever the 4051 wishes to perform tape input/output operations and the LOAD line is false. A false on the LOAD line indicates that there is no tape in true only if a tape cartridge has been loaded into the 4051. The LOAD line will remain true until the tape cartridge is removed.

LOAD	LOAD This signal is used by the microprocessor through the keyboard PIA to determine if a tape cartridge is loaded and available to perform input/output operations.
LOADED	LOADED This signal is generated by a microswitch in the 4051 to indicate that a tape cartridge is currently in the system.
LOHOLE	LOWER HOLE INDICATOR This signal is generated by a phototransistor as light shines through the lower magnetic tape hole, right side of tape. LOHOLE is used to decode beginning of tape (BOT) and end of tape (EOT).
MAB0 thru MAB11	MULTIPLEXED ADDRESS BUS These signal lines are outputs from the random access memory (RAM) refresh multiplexer. When MCP2 is false, a memory refresh address is on the MAB address lines. When MCP2 is true, memory data address from the microprocessor (or 4051 system test fixture) is on the MAB address lines. The MAB address lines are used to address the contents of random access memory (RAM) devices and also to provide RAM refresh addressing.
MAKE COPY	MAKE COPY This signal is generated on the display board and is sent to an optional Hard Copy Unit whenever a copy is to be made.
MCP1	MASTER CLOCK PHASE 1 This is the phase 1 clock for the microprocessor. It is generated as a fixed number of pulses from a crystal oscillator.
MCP2	MASTER CLOCK PHASE 2 This is the phase 2 clock for the microprocessor. It is also used for peripheral timing and memory timing operations. MCP2 is generated as a fixed number of pulses from a crystal oscillator.
MDATA	MORE DATA This signal is generated by the tape cartridge clocking circuitry to request more data to be written to the tape. It is also used to enable the load and shift operations of a parallel-in serial-out shift register.
MTCLK	MAGNETIC TAPE CLOCK This signal is generated by a counter in the master timing circuits. MTCLK is used to drive the clock control circuitry that writes data to the magnetic tape cartridge.

NDAC	NOT DATA ACCEPTED This is a handshake control line on the general purpose interface bus (GPIB). Its true state indicates that data is not accepted. Listener devices cause this line to go false to signal an acceptance of data in response to DAV.
NMI	NON-MASKABLE INTERRUPT This is a high priority interrupt used by the cartridge tape control logic to request service of the microprocessor. This interrupt cannot be disabled within the microprocessor.
NOBURN CLK	NO BURN CLOCK This is a 12.5% duty cycle clock signal used to reduce writing beam energy when the 4051 draws short vectors. This prevents phosphor burns resulting from concentrated writing energy. The NOBURN CLK signal is generated by the system timing circuits.
NODRIVE	NO TAPE DRIVE This signal is the inverse of DRTAPE to indicate that the magnetic tape motor is not being driven. It is used to disable the writing circuits when the tape is not moving.
NRFD	NOT READY FOR DATA This is a handshake signal used by the general purpose interface bus (GPIB) to indicate that a listener is not ready for data. The false state indicates that a listener is ready to receive more data.
OFA	OVERFLOW A This signal is generated in the Firmware Backpack whenever the first overflow read only memory device is addressed.
OFB	OVERFLOW B This signal is generated in the Firmware Backpack whenever the second overflow read only memory device is addressed.
ORIGIN	ORIGIN SHIFT CLOCK This signal line is pulsed each time the page (or crt display) is erased. ORIGIN clocks a counter that determines the zero address offset for a new page of displayed information.
PIAE	PERIPHERAL INTERFACE ADAPTER ENABLE This signal is true when both VMA from the microprocessor and MCP2 from the master clock circuits are true. PIAE is used as a timing or enable pulse for peripheral interfaces such as PIAs and ACIAs.

PIAS	PERIPHERAL INTERFACE ADAPTER SELECT This signal goes true whenever the address on the address bus lies within the peripheral interface address space. This decoded address signal is used to generate IPIAS and EPIAS.
RAMP	RAMP The voltage on this analog signal line determines the speed of the tape motor and therefore the cartridge tape velocity. The RAMP voltage is determined by an integrator circuit on the motor drive board. Tape velocity is approximately 10 inches per second for each volt of RAMP voltage.
RAMS0 thru RAMS7	RANDOM ACCESS MEMORY SELECT Each of the RAMS lines is generated by an address decoder. Each line enables 4K bytes of random access memory composed of eight 4K RAM chips. RAM blocks 0 and 1 are on the cpu board. RAM blocks 2 thru 7 are on the expanded memory board.
RAMW	RANDOM ACCESS MEMORY WRITE This signal causes a write operation to be performed on random access memory (RAM) devices within the 4051. It goes true whenever a write operation is commanded on R/W from the microprocessor and MCP2 is true. It also goes true if the 4051 system test fixture issues a write command, RWOC, during MCP2.
RBC	ROM BANK CONTROL This signal is generated by the bank switch data decoder in a backpack to disable the 8K ROM bank on the cpu board whenever another ROM bank that shares the same address space is selected.
RCCLK	RANDOM ACCESS MEMORY COUNTER CLOCK This signal is generated by the master clock circuitry to periodically advance the random access memory refresh address counter. The counter cycles the refresh addresses associated with address lines MAB0 thru MAB5.
RCE0 thru RCE7	RAM CHIP ENABLE Each RCE line goes to chip enable inputs of a 4K block of RAM and is activated at the appropriate time for input/output operations and memory refresh operations. During RAM input/output operations, only one of the eight RCE lines is active. During memory refresh, REFCLK0 activates RCE0 and RCE1, REFCLK1 activates RCE2 thru RCE4, and REFCLK2 activates RCE5 thru RCE7.

RCLK

READ CLOCK
This signal is generated by data being read from the internal magnetic tape. RCLK is used to clock the serial tape data into the serial-to-parallel shift register. It is also interrogated by one shots to decode the various tape formatting patterns (i.e., intercharacter gaps, record marks, file marks and interfile gaps).

MRDATA

MAGNETIC READ DATA

This signal is serial data recovered from the tape during a read operation. On the cpu board it is converted to 8-bit parallel data for use by the microprocessor.

RDATA

RECEIVE DATA
When the 4051 acts as a data set, the signal transmitted at pin 3 of the RS-232 connector on the Communication Backpack is data to be received by a data terminal.

When the 4051 acts as a data terminal, RDATA becomes **Transmit Data** on pin 2 of the RS-232 communication cable. This data is sent to data communication equipment.

RDBYTE

READ BYTE
This signal goes true during a magnetic tape read operation when 8 bits of data have been loaded into the read data register, a serial-in parallel-out shift register. RDBYTE informs the microprocessor to read the data currently in the read data register.

RDE

RAM DECODE ENABLE
This signal is generated by the master timing circuitry to enable the decoding of a random access memory (RAM) address during a specified time period (the last 480 nanoseconds of MCP2).

READ

READ
This signal is generated by an optional Hard Copy Unit and goes true whenever the Hard Copy Unit is making a copy of the image on the crt.

REFCLK0
REFCLK1
REFCLK2

REFRESH CLOCK SIGNALS
These clock signals are generated by the master clock circuits to time the refresh activity for random access memory (RAM) devices. Each clock signal initiates refresh activity for a bank of RAMs.

REN	REMOTE ENABLE The 4051 places this signal on the general purpose interface bus (GPIB) whenever the BUSY light is lit. This signal places all devices on the GPIB under control of the 4051, causing these devices to ignore their front panel controls.
RES	RESET This signal is a buffered data line from the RESTART signal. This signal resets all interface devices and restarts the microprocessor programming.
RESTART	RESTART This signal is generated by the +5 volt power supply during 4051 power-up operations. It can also be generated by the 4051 system test fixture.
REV	REVERSE This signal controls the direction of tape drive operation. When true, the tape travels in the backward direction when the tape unit is ordered into motion. When false, the tape travels in the forward direction.
RMARK	RECORD MARK This signal interprets the pulses from the intercharacter gap counter to determine when a record mark on tape has been read. A record mark is four successive intercharacter gaps separated only by flux reversals on track 0. There is one flux reversal between each intercharacter gap.
ROMDIS	READ ONLY MEMORY DISABLE This signal is generated by the 4051 system test fixture to disable the ROME15 signal. When ROMDIS is true, the address space associated with ROME15 is used by memory devices within the 4051 system test fixture.
RTS	REQUEST TO SEND The 4051 cannot act as a half-duplex data set. RTS is a half-duplex control signal received on pin 4 of the RS-232 connector on the Communication Backpack. When the 4051 acts as a half-duplex data terminal, RTS becomes **Clear To Send** on pin 5 of the RS-232 communication cable. CTS is transmitted as **Request To Send** whenever the 4051 needs to transmit data. RTS is received as **Clear To Send** whenever it is ok for the 4051 to transmit data. This is half-duplex normal operation.

R/W	READ/WRITE This signal is generated by the microprocessor to control direction of data flow on the data bus. When R/W is true, the microprocessor reads data that has been placed on the data bus by peripheral interfaces or memory. When R/W is false, the microprocessor places data on the data bus to be written into memory or a peripheral interface.
RWIC1 and RWIC2	READ-WRITE INPUT COMMAND These signals are contained entirely within an integrated circuit chip. They are used to place random access memory (RAM) output data onto the data bus whenever a RAM read operation is performed.
RWOC	READ-WRITE OUTPUT COMMAND This signal is the buffered R/W line from the microprocessor. It is used by all devices that are inserted into the backpack slots. The 4051 system text fixture also activates this line when the microprocessor is halted to examine or deposit data in memory locations within the 4051.
SA0 thru SA7	SELECTED DATA BUS A This data bus is used to receive data from the magnetic tape. The bus consists of the PA data lines on the Y axis D/A peripheral interface adapter.
SAFE	SAFE This signal is generated by the magnetic tape microswitch that indicates whether the tape cartridge is write protected. The true state of the SAFE signal prevents data from being written to the tape cartridge.
SAFE SW	SAFE SWITCH This switch is open when a tape cartridge is write-protected. This switch is closed to attach the +15 V_1 supply voltage to the tape writing circuits.
SB0 thru SB7	SELECTED DATA BUS B This data bus is used to send data bytes to the magnetic tape. The bus consists of the PB data lines on the Y axis D/A peripheral interface adapter.
SHIFT	SHIFT This signal is generated by the keyboard whenever the SHIFT key is pressed.

SOT

SELECTED OPERATION TRIGGER
This signal is generated by a peripheral interface adapter to implement several timing functions.

1. SOT triggers a refreshed dot during the display of a cursor or refreshed character on the crt.

2. SOT becomes the WCLK signal whenever an intercharacter gap (GICG) is to be written to the magnetic tape.

3. SOT triggers a 40 microsecond timer on the tape drive board by activating the DELAY IN signal. After initiating SOT, the microprocessor can monitor DELAY OUT to determine when 40 microseconds has elapsed. The 40 microsecond timer is used to control functions such as generating intercharacter gaps on magnetic tape, line turn-around timing in half-duplex communications and status response timing in 4012 Display Terminal emulation.

SPEAKER

SPEAKER
This is a filtered return line for the BUSY signal as it passes through a speaker for generating an audio tone.

SRQ

SERVICE REQUEST
This is a control line that is activated by a peripheral device on the general purpose interface bus (GPIB) to request service from the microprocessor (system controller). The 4051 responds to SRQ by performing a serial poll of devices on the GPIB.

SRX

SECONDARY RECEIVED LINE SIGNAL DETECTOR

This signal is found on pin 12 of the RS-232 connector on the Communication Backpack. It is also on pin 12 of the RS-232 communication cable. When the 4051 acts as a half-duplex data terminal using supervisor communications, the signal received on SRX indicates that the computer or data set is listening for data. When SRX goes false, the computer or data set wishes to send data to the 4051.

STXA
STXC

SECONDARY REQUEST TO SEND (RS-232-A)
SECONDARY REQUEST TO SEND (RS-232-C)
STXA is transmitted by the 4051 on pin 11 of the RS-232 connector on the Communication Backpack or the end of the communication cable. STXC is transmitted by the 4051 on pin 19 of the RS-232 connector on the Communication Backpack or the end of the

communication cable. When the 4051 acts as a half-duplex data terminal using supervisory communications, the signal transmitted on STXA or STXC is true whenever the 4051 is listeneing for data. STXA or STXC is false whenever the 4051 wishes to transmit data. When STXA or STXC is false, the 4051 must wait for SRX to become true before transmitting data. This is half-duplex supervisory communications.

TALK

TALK
This signal goes true whenever the 4051 wishes to transmit data over the general purpose interface bus (GPIB). TALK goes false whenever the 4051 listens to data on the GPIB. TALK provides an enable signal for line buffers on the data lines (DIO1 thru DIO8) and handshake lines (DAV, NRFD and NDAX).

TARSIG

TARGET SIGNAL
This signal is generated by the crt readout amplifier when a hard copy is being created by an optional Hard Copy Unit. During hard copy operation, the crt writing beam is being strobed. Whenever the writing beam lands on a stored (written) portion oof the display, TARSIG momentarily goes true and is used by the Hard Copy Unit to indicate the presence of displayed information at any given location.

TDATA

TRANSMIT DATA
When the 4051 acts as a data set, the signal received on pin 2 of the RS-232 connector on the Communication Backpack is serial data transmitted from a computer terminal to the 4051.

When the 4051 acts as a data terminal, TDATA becomes **Receive Data** on pin 3 of the RS-232 connector on the RS-232 communication cable. It is used to receive data from a computer or data communication equipment.

TNIM

TAPE NOT IN MOTION
This signal is generated by the magnetic tape motor drive circuits to indicate that the tape has stopped.

TTY

TELETYPE LOCK
This signal is generated by the TTY LOCK key on the keyboard. When the TTY LOCK key is down TTY is true and an abbreviated ASCII character set is selected. TTY being false indicates that the TTY LOCK key is up and the full printable ASCII character set is enabled. Decoding of ASCII characters is performed by the microprocessor.

TUTS	TAPE UP TO SPEED This signal is generated by the motor drive circuitry to indicate that the tape motor is up to operating speed of 30 or 90 inches per second.
UPHOLE	UPPER HOLE This signal is generated by a phototransistor as light shines through the upper magnetic tape hole, left side of tape. UPHOLE is used to decode beginning of tape (BOT), the tape load point and the early warning hole near the end of tape.
VECTOR	VECTOR This signal is generated by data from a peripheral interface adapter to enable vector generation. When true, VECTOR activates the filters on the digital-to-analog converter outputs. VECTOR also enables the VPULSE one shot.
VEN	VECTOR ENABLE This signal is generated by data from a peripheral interface adapter to enable the drawing of a vector on the crt. VEN disables the alphanumeric timing one shots and enables the writing beam (Z axis) to turn on during vector generation.
VIEW	VIEW This signal is generated on the cpu board to control the crt flood gun anode voltage. When VIEW is true, the flood gun anode is at +150 volts. When false, the flood gun anode is at zero volts. When the cpu board asserts view mode operation, VIEW is true. When the cpu board asserts hold mode operation, VIEW is activated by a low duty-cycle square wave.
VIEWCAUSE	VIEW CAUSE SIGNAL This signal is generated by a 100 second view timer on the cpu board. VIEWCAUSE is triggered each time the shift key is pressed or each time data is loaded into the digital-to-analog converter circuits.
VMA	VALID MEMORY ADDRESS This signal is generated by the microprocessor when a memory address is placed on the address bus.
VPULSE	VECTOR PULSE This is a 3.7 millisecond pulse that provides the vector drawing time signal. The signal goes true whenever a vector is being generated regardless if it is displayed or not.

WAIT	WAIT This signal is generated by Hard Copy Units that have a multiplexer option. The signal goes true whenever a Hard Copy Unit is currently making a copy from another crt display when the 4051 initiates a copy request. The WAIT signal is used to hold display modification activity until a hard copy has been made of the crt in the 4051.
WCLK	WRITE CLOCK This signal is generated by the magnetic tape write control circuitry driven by MTCLK on the cpu board. WCLK is used to clock data onto the magnetic tape within the 4051.
WDATA	WRITE DATA This is serial data to be written to the internal magnetic tape. This data is unpacked from a parallel-in serial-out shift register on the cpu board and is strobed onto the magnetic tape by the write clock, WCLK.
WENABLE	WRITE ENABLE This signal is generated as data from a peripheral interface adapter to enable magnetic tape writing activity. WENABLE determines whether the write clock signal (WCLK) can be generated and whether data can be loaded into the write data shift register.
WR	WRITE This signal is generated as data from a peripheral interface adapter to select the read/write circuits on the tape drive board. When WR is true, data may be written or stored onto a tape cartridge. When WR is false, data may be read from a tape cartridge.
X	X AXIS ANALOG SIGNAL This signal is the X axis deflection voltage from the filter whose input is X D/A. If vectors are to be drawn, then X D/A is passed through an active RC filter network before becoming X. X voltage range is approximately +8 volts at the left of the screen and −8 volts at the right of the screen.
X AMP	X AXIS AMPLITUDE This signal is generated by the display multiplexer circuits on the display board. Inputs to the circuitry are X HC RAMP IN from a Hard Copy Unit and X from the cpu board. X AMP is used to drive the deflection amplifiers and the correction circuitry for geometry and focus.

X CHAR D/A	X CHARACTER DIGITAL TO ANALOG Character positioning is determined by a primary digital-to-analog converter while column selection within a character is determined by X CHAR D/A.
X D/A	X DIGITAL TO ANALOG This signal is the output from the X axis digital-to-analog converter amplifier. X D/A is selectively filtered to determine writing beam deflection and is used directly as a voltage comparison with a Joystick output voltage.
XERR	X AXIS JOYSTICK ERROR This signal is generated by a comparison amplifier using X D/A and X JOY as input voltages. The state of XERR is examined by the microprocessor to determine the location referenced by the Joystick.
X HC RAMP IN	X AXIS HARD COPY RAMP INPUT This signal is generated by an optional Hard Copy Unit to drive the X axis writing beam deflection while creating a hard copy of the image displayed on the crt.
X JOY	X JOYSTICK VOLTAGE This signal line has a position reference voltage generated by an optional Joystick that can be used for graphic input applications.
XPC2 thru XPC4	EXTERNAL PERIPHERAL CONTROL LINES Each line is a decoded address of a possible external peripheral interface adapter (PIA). These lines can be used to address special interfaces placed into backpack slots or ROM Expander Unit slots. In order for an interface in a backpack slot to be activated, its slot should be previously selected by bank switch circuitry.
Y	Y AXIS ANALOG SIGNAL This signal is the Y axis deflection voltage from the filter whose input is Y D/A. If characters are drawn, the filter is disabled and Y becomes Y D/A. If vectors are to be drawn, then Y D/A is passed through an active RC filter network before becoming Y. Y voltage range is approximately +8 volts at the top of the screen and −8 volts at the bottom of the screen.
Y AMP	Y AXIS AMPLITUDE This signal is generated by the display multiplexer circuits on the display board. Inputs to the circuitry are Y HC RAMP IN from a Hard Copy Unit and Y from the cpu board. Y AMP is used to drive the deflection amplifier and correction circuitry for geometry and focus.

Y CHAR D/A	Y CHARACTER DIGITAL TO ANALOG Character positioning is determined by a primary digital-to-analog converter while row selection within a character is determined by Y CHAR D/A.
Y D/A	Y DIGITAL TO ANALOG This signal is the output from the Y axis digital-to-analog converter amplifier. Y D/A is selectively filtered to determine writing beam deflection and is used directly as a voltage comparison with a Joystick output voltage.
YERR	Y AXIS JOYSTICK ERROR This signal is generated by a comparison amplifier using Y D/A and Y JOY as input voltages. The state of YERR is examined by the microprocessor to determine the location referenced by the Joystick.
Y HC RAMP IN	Y HARD COPY RAMP INPUT This signal is generated by an optional Hard Copy Unit to drive the Y axis writing beam deflection while creating a hard copy of the image displayed on the crt.
Y JOY	Y JOYSTICK VOLTAGE This signal line has a position reference voltage generated by an optional Joystick that can be used for graphic input applications.
Z	Z AXIS SIGNAL This signal is generated by the cpu board to control the state of the writing beam. Z becomes Z MPX on the display board if a hard copy is not being made. If Z is true, the writing beam of the crt will turn on. If false, the writing beam will remain off.
Z MPX	Z AXIS MULTIPLEXED SIGNAL This signal is generated on the display board to drive the writing beam circuits (Z axis amplifier). When a hard copy is to be generated, Z MPX is triggered by INTER. Otherwise, Z MPX is equal to Z.
Z VECT	Z VECTOR DRAW This signal is generated by vector generation circuitry on the cpu board to turn on the writing beam for the duration of a vector draw. The Z signal is controlled by Z VECT as well as outputs of character dot one shots.

TEKTRONIX®
committed to technical excellence

MANUAL CHANGE INFORMATION

PRODUCT 4051 SERVICE
VOLUMN II 070-2286-00

CHANGE REFERENCE C1/677
DATE 6-2-77

CHANGE:	DESCRIPTION

EFF SN B082623

SCHEMATIC AND BOARD PHOTOGRAPH CORRECTIONS

REPLACE: The existing diagram DEFLECTION CIRCUITRY 4-5 with the following 4-5.

DIAGRAM 4-6

CHANGE TO:

Q1036 should be labeled Q1038

Q1039 should be labeled Q1048

REPLACE: Display board 670-4087-06 on the apron of 4-5 with the following Display board 672-0546-05.

CHANGE:	DESCRIPTION

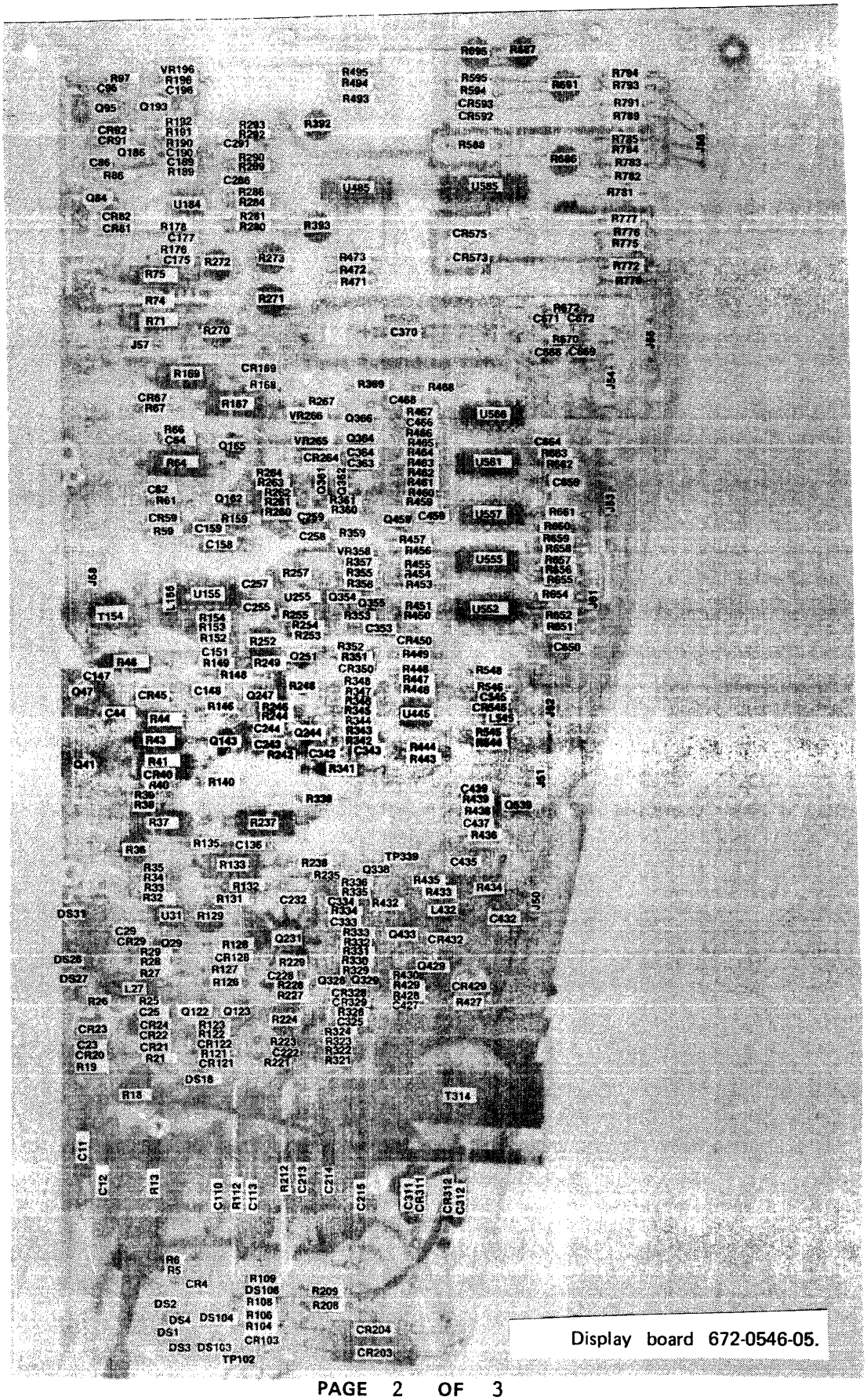

Display board 672-0546-05.

TEKTRONIX®
committed to technical excellence

MANUAL CHANGE INFORMATION

PRODUCT 4051 Service
070-2286-00

CHANGE REFERENCE M31106
DATE 6-2-77

CHANGE:	DESCRIPTION

EFF SN B082820

ELECTRICAL PARTS LIST AND SCHEMATIC CHANGES

CHANGE TO:

A4	672-0546-06	CKT BOARD ASSY:DISPLAY
R212	307-0314-01	RES.,FXD,FILM:VOLTAGE DIVIDER

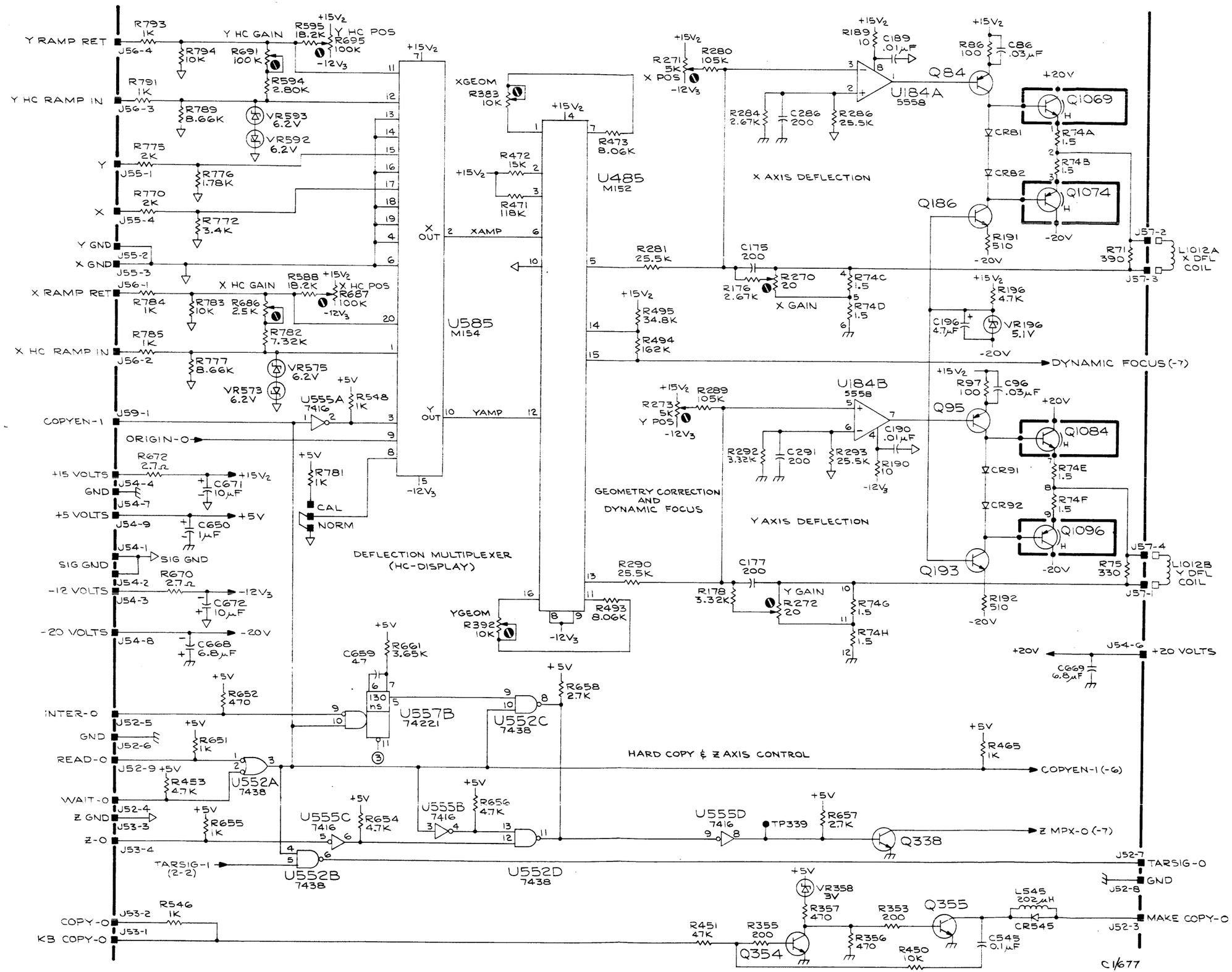
Y RAMP RET
Y HC RAMP IN
Y
X
Y GND
X GND
X RAMP RET
X HC RAMP IN
COPYEN-1
ORIGIN-0
+15 VOLTS
GND
+5 VOLTS
SIG GND
-12 VOLTS
-20 VOLTS
INTER-0
GND
READ-0
WAIT-0
Z GND
Z-0
TARSIG-1 (2-2)
COPY-0
KB COPY-0
Y HC GAIN
Y HC POS
X HC GAIN
X HC POS
U585 M154
U485 M152
XGEOM
YGEOM
XAMP
YAMP
X OUT
Y OUT
U555A 7416
CAL
NORM
DEFLECTION MULTIPLEXER (HC-DISPLAY)
GEOMETRY CORRECTION AND DYNAMIC FOCUS
X AXIS DEFLECTION
Y AXIS DEFLECTION
X POS
Y POS
X GAIN
Y GAIN
U184A 5558
U184B 5558
Q84
Q186
Q95
Q193
Q1069
Q1074
Q1084
Q1096
DYNAMIC FOCUS (-7)
L1012A X DFL COIL
L1012B Y DFL COIL
+20 VOLTS
U557B 74221
U552A 7438
U552B 7438
U552C 7438
U552D 7438
U555B 7416
U555C 7416
U555D 7416
HARD COPY & Z AXIS CONTROL
COPYEN-1 (-6)
Z MPX-0 (-7)
TP339
Q338
TARSIG-0
GND
MAKE COPY-0
Q354
Q355
VR358 3V
L545 202μH
CR545
C1/677